User Guide

Version 2.4.3

CONTENTS

Safety

R/C models such as helicopters are not toys! It is necessary to check all the manufacturer instructions of the model, comply with local laws and to perform pre-flight inspections of the model to address all possible mechanical concerns, electrical concerns and failures immediately.

Rotor blades and propellers rotate at high speed and can lead to serious injury to persons and property if not respected.

If you encounter any problems, contact your dealer or other experienced modelers.

Pay particular attention to your own safety and the safety of others. Never fly amongst or over people, animals, or on private property without prior authorization from the property owner. Fly only in safe places where no additional damage is possible to other objects, because the model can suddenly become unmanageable for various reasons, such as failure of electronics, mechanical failure, pilot error or radio interference.

Do not try to fly damaged models or perform repairs using damaged parts; always replace damaged parts with new ones. Never fly a model which exhibits excess vibrations, this may cause unwanted flight characteristics or in-flight failures. Find the source of the vibrations and fix the problem.

⚠ **Spirit** is not an autopilot, it is necessary to have knowledge of flying R/C models. The system is only designed to improve flight performance. We recommend using R/C simulators designed for training before the first flight.
The user takes full responsibility for any damage or injury caused while flying an R/C model equipped with one of our devices. The manufacturer can neither guarantee nor control the conditions in which the unit is being used.

Introduction

Spirit is a device for stabilizing R/C models such as flybarless helicopters. Spirit features include electronic paddle simulation, vibration logging, support for various Tx/Rx types and a rudder gyro for those who want to continue using a mechanical flybar.

Thanks to flybarless mechanics, the system improves the efficiency and maneuverability of the helicopter and it's stability while also extending flight times.

Flight characteristics are easily customizable according to your preferences, from stable flight for beginners to demanding acrobatics with maximum agility for experts.

Because the Spirit uses the most advanced technology, the model can be controlled very precisely even under harsh conditions such as strong winds while maintaining a constant pirouette.

This user guide will help you to properly mount the unit on a model and to carry out the step by step configuration to prepare your model for its first flight.

The **Spirit Settings** software comes with an interactive setup wizard which will navigate you through the whole process. One can even try out a demonstration mode to discover all possibilities. The user guide and the software complement each other.

Please check our website; spirit-system.com (http://www.spirit-system.com/) for downloading the latest firmware and software.

You can also raise any questions in our forum (http://www.spirit-system.com/phpBB3/index.php).

Installation

Properly mounting of Spirit plays an important role for the correct operation of your model.

Find a suitable location where vibrations are as low as possible - this is usually the same location shown by the manufacturer for mounting a gyro.

It is VERY important that the unit will be mounted so that the unit is **exactly** perpendicular to each rotational axis. Depending on your preference and available space it can be mounted in eight different positions:

- Horizontal (0°)
- Horizontal (180°)
- Horizontal (0° + inverted)
- Horizontal (180° + inverted)
- Vertical (0° - left side)
- Vertical (180° - left side)
- Vertical (0° - right side)
- Vertical (180° - right side)

In case the unit is positioned so that connectors are facing forwards, select *180°*, please. If the unit is mounted upside down, select *inverted* option.

Mounting examples

In the following photo the unit is mounted by double-sided adhesive tape to the frame of model.

Example 1: Position is **Horizontal (180°)**

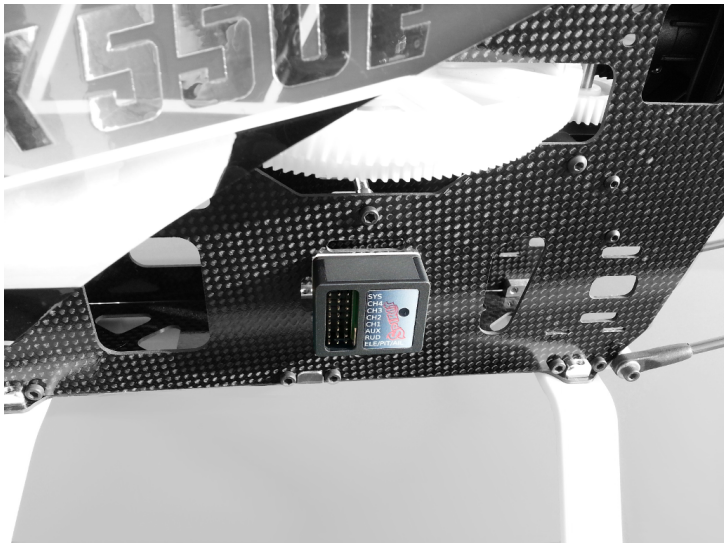

Example 2: Position is **Vertical (180° - left side)**

In order to better insulate against any vibrations from the model, it is necessary to choose the right double-sided mounting tape. The tape should limit any transmission of vibrations from the model to the Spirit which may produce undesirable flight characteristics. Vibrations may also be caused by incorrectly balanced blades, damaged bearings, bent shafts and other mechanical issues.

We recommend to use supplied double sided tape.

Wiring

Spirit can be used as a standalone tail gyro or as a flybarless system. Wiring to the unit depends on the type of receiver used.

⚠ **Spirit is pre-programmed to 1520µs servo neutral impulse and 50Hz frequency – please ensure you have the correct servo parameters selected as specified by your servo manufacturer.**
If the neutral impulse of your servo/s is different to the above, such as 760µs, do not connect this servo yet as it could be damaged.

Some connectors have non-standard dimensions that could interfere with neighboring connectors after plugging in the unit. As a solution, we recommend replacing these connectors with JR or Futaba type.

Never plug a connector for powering the unit into the SYS or ELE/PIT/AIL positions or you may risk damaging the unit.

Contents

1 STANDALONE GYRO AND FLYBAR

Owners of flybarred helicopters can take advantage of the heading hold gyro, which keeps the tail in the direction given by the transmitter regardless of effects from wind or any outside forces.

Connect the rudder servo to the *CH4* port of the Spirit unit. If you also use a standard receiver, you will need to connect GEAR (or AUX) from your receiver to the AUX port on the Spirit unit. Also, you will need to connect your receiver RUD port to the RUD port on the Spirit unit.

Even if you do have a flybarred model, you can also connect the unit in the same way as a you would a flybarless one. This allows you to use the full potential of the unit including Stabilization and Rescue mode. In order for this to work correctly, it is necessary to tick the *Flybar mechanic* parameter in the Stabi tab during setup. All other parameters can be configured just the same as with a flybarless head.

2 FLYBARLESS

Flybarless helicopters can take advantage of the full capabilities of the Spirit unit. The Spirit will stabilize the model on all axes and also make it less affected by wind, extend flight times and increase the agility of your model. When properly set up, flight characteristics should be more stable which will give you the confidence to carry out even the most challenging maneuvers.

Flybarless rotor blades are also different from blades designed for flybarred models. For optimum flight characteristics it is recommended to use them. When using the Spirit unit as a flybarless system, all servos should be connected in the corresponding positions:

µSpirit

CH1 – Pitch / Aileron servo
CH2 – Elevator servo
CH3 – Aileron / Pitch servo
CH4 – Rudder servo / Rudder ESC

Spirit

CH1 – Pitch / Aileron servo
CH2 – Elevator servo
CH3 – Aileron / Pitch servo
CH4 – Rudder servo

Spirit Pro

CH1 – Pitch / Aileron servo
CH2 – Elevator servo
CH3 – Aileron / Pitch servo
CH4 – Rudder servo

CH0 – auxiliary (optional) cyclic servo for CCPM 90 swashplate type.

Servos at positions CH1 and CH3 are dependent on the Swashplate settings. Aileron servo on the model is mostly positioned on the right side while pitch on the left side.

3 ESC/MOTOR WIRING

Electronic Speed Controllers (ESCs) for electric motors or Throttle Servos for combustion motors can be connected in two ways:

1. **In the receiver** - Throttle port *(Failsafe is handled by receiver)*
2. **In the Spirit unit** - AUX (AUX1) port *(Failsafe is handled by unit and/or additionally by receiver)*

Wiring details for each receiver type are described always in the particular scheme - see next sections.

With Spektrum DSM2/X satellites throttle must be connected always to the unit.

By default Throttle output from the unit is disabled for all receiver types (except Spektrum DSM2/X). Assign **Channel 1** in the *General/Channels - Throttle*.

In order to use Governor it is always required to use Throttle output from the unit.

Throttle frequency that can be configured in the unit can stay at default settings (60Hz). Only if Governor is used it is usefull to set as high frequency as possible. Recommended values are described in the Governor page.

3.1 Castle ESC

If Castle ESC is used, please configure following Throttle parameters in the *General - Throttle/Governor* window:

- *Throttle Frequency:* 60Hz.
- *Throttle Range - Min.:* 1060 us.
- *Throttle Range - Max.:* 1940 us.

All other ESCs should work well with default settings. If not, please use the Factory default.

3.2 Throttle Servo

For combustion helicopters it is required to set optimal travel range in order to prevent a binding. If the servo is connected in the unit, you can set absolute limits that can never be exceeded. These can be configured in the *General - Throttle/Governor - Throttle Range*.

It is also possible that *Throttle Reverse* will be necessary to get fully closed condition when Throttle Hold is engaged. This will change servo movement direction.

3.3 µSpirit and Rudder ESC/Motor

µSpirit unit has full support for motor driven tail rotors. These motors are usually driven by a dedicated ESC. To control the motor standard servo signal is used. Connect Rudder ESC to the CH4 port. In the Setup Wizard it is necessary to set **Rudder - Control type to Motor**.

Lastly make sure you will set Throttle range for this ESC. Please see description of the *Rudder End-points* in the Configuration/Limits tab (http://manual.spirit-system.com/index.php?title=Configuration#LIMITS_TAB) section.

In order to turn off the Tail motor when Main motor is not running it is necessary to later assign the Throttle channel. See the Channels assignment in the Configuration/General - Channels (http://manual.spirit-system.com/index.php?title=Configuration#GENERAL) section. This can be changed anytime after the basic configuration.

4 CONNECTION OF STANDARD RECEIVER (PWM)

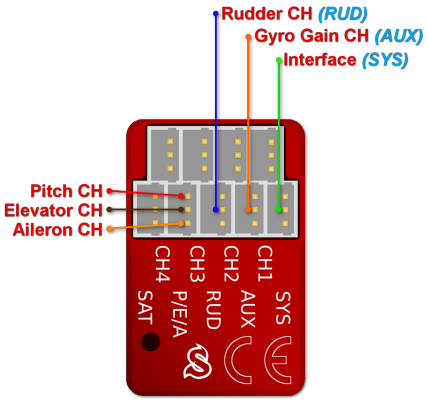

µSpirit – receiver type: PWM

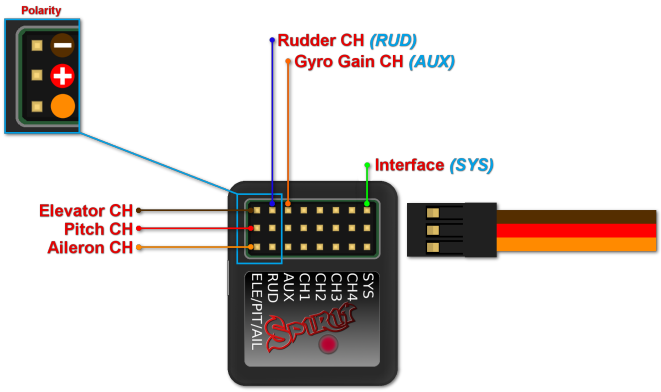

Spirit – receiver type: PWM

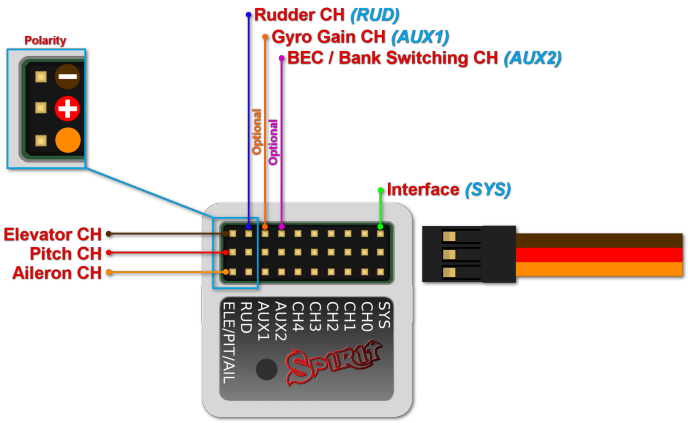

Spirit Pro – receiver type: PWM

For standard receivers it is necessary to use two normal and one special cable. Three connectors from the special cable should be plugged into the receiver and the end of these

cables to the unit.

The unit is powered by two cables from the receiver. These are connected to the AUX and RUD positions. The Throttle (ESC or Throttle servo) should be connected to the receiver.

The easiest way you can start is to connect a cable between the RUD port with Rudder output of the receiver. Then continue with the AUX port which should be connected to the Gyro Gain channel output of the receiver. Next, connect the Aileron, Elevator and Pitch channels. If you are not sure whether you have the correct output or not, you can plug in one servo and power the unit to verify that your connection is correct. This can be repeated for each servo. The Diagnostic tab in the software is very helpful too, because you can see whether the connection is correct even without connected servos.

For Spektrum receivers you can view the Spektrum PWM connection scheme.

Spirit Pro
The unit is able to control Bank Switching by 7th channel of the receiver. Connect the cable to the AUX2 port and allow Bank Switching in the software.

Never plug a connector for powering the unit to SYS or ELE/PIT/AIL ports.

5 CONNECTION OF SPEKTRUM DSM2/X SATELLITE

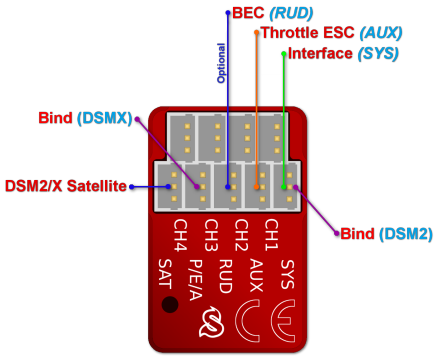

µSpirit – receiver type: Spektrum DSM2/X

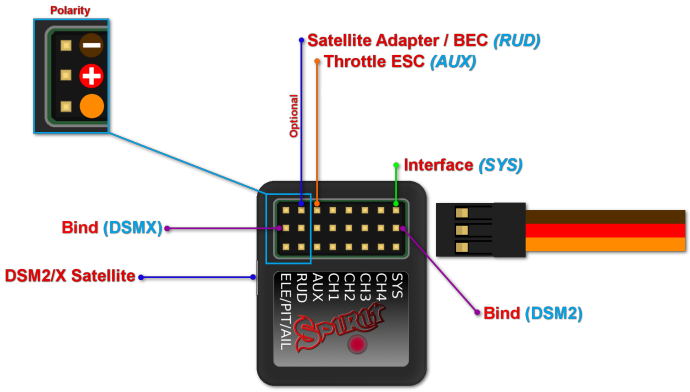

Spirit – receiver type: Spektrum DSM2/X

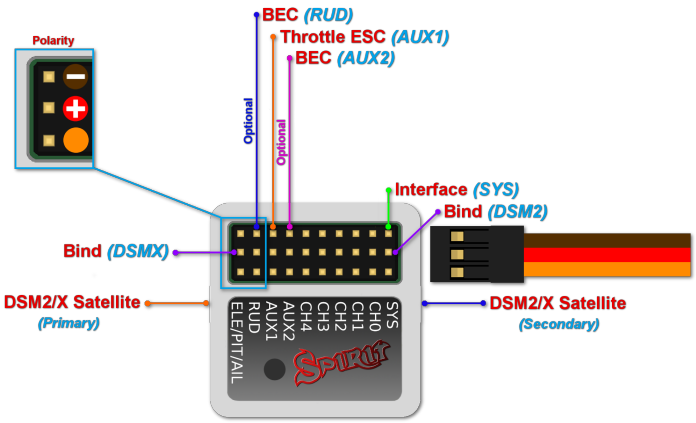

Spirit Pro – receiver type: Spektrum DSM2/X

Connection to a BEC is optional. If the model is powered by an external BEC, this must be connected to the RUD port. Also the power lead from the ESCs internal BEC must be disconnected.

Spirit
A second satellite can be connected, but this can only be achieved via a special adapter connected to the RUD port. This adapter can be purchased separately. Before satellites can be used they must be bound to your transmitter, taking into account any failsafes that need to be set. To use both, two satellites and an external BEC, be sure to use a Y-harness made from large gauge wire to supply the high current that is needed.

Spirit Pro
The Pro version allows you to connect two satellites directly to the unit. If you want to use only one satellite, you have to use the Primary connector.

To bind the satellites, insert a bind plug in the SYS port for DSM2 satellites or the ELE/PIT/AIL port for DSMX satellites. Power cycling the Spirit start the bind process. Once successfully bound, the STATUS LED will go out and the satellite LED will come on. If the second satellite fails to bind, swap the satellites and repeat the bind process.

Be sure Receiver type in the software is configured to Spektrum DSM2/X or else binding process will not work. Never plug a connector for powering the unit to SYS or ELE/PIT/AIL positions.

6 CONNECTION OF FUTABA S-BUS RECEIVER

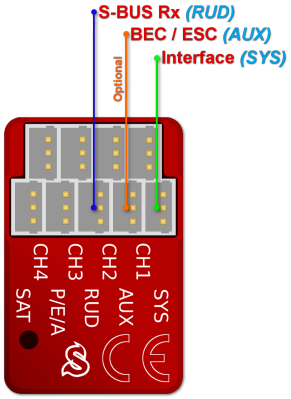

µSpirit – receiver type: Futaba S-BUS

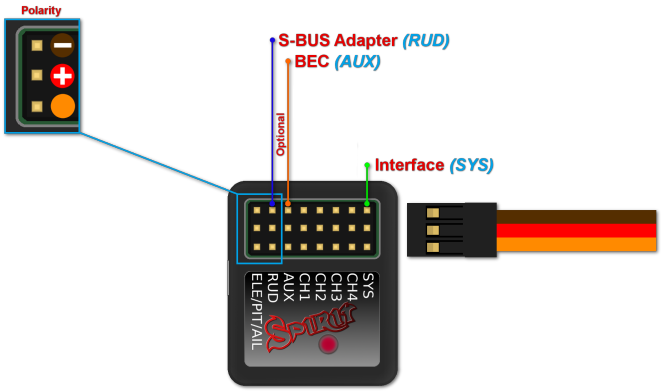

Spirit – receiver type: Futaba S-BUS

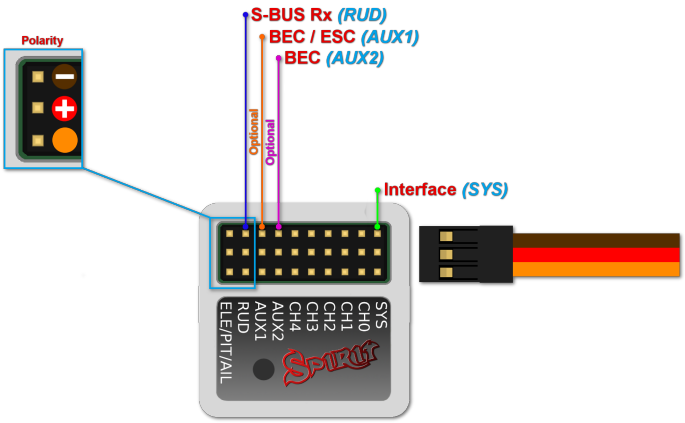

Spirit Pro – receiver type: Futaba S-BUS

Spirit
When using S-BUS it is necessary to use an inverter that replaces the cable between the receiver and the Spirit unit's RUD port. The inverter cable - called **SBUS Adapter** - can be purchased separately. The SBUS Adapter has to be connected in the way, that longer end is directed to the unit and shorter to the receiver. This apply for both Futaba and FrSky receivers.

Spirit Pro
Connect the receiver with the unit by normal patch cable to the RUD port. You can use cable that is included in the package.

Connection to a BEC is optional. For models of 500 size and larger it is recommended to use dual power supply cables due to the increased power consumption. That means besides the S-BUS cable, an additional power supply cable should be connected to the AUX port.

When using this type of receiver you can connect the throttle cable directly to the receiver. Alternatively, you can assign the throttle channel in the software and use the AUX as throttle output from the unit.

Never plug a connector for powering the unit to SYS or ELE/PIT/AIL ports.

7 CONNECTION OF PPM RECEIVER

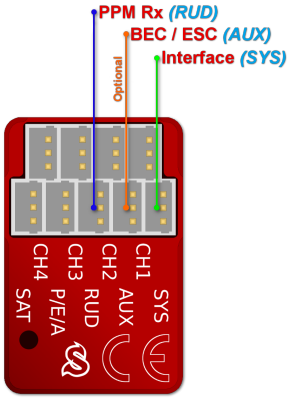

µSpirit – receiver type: PPM

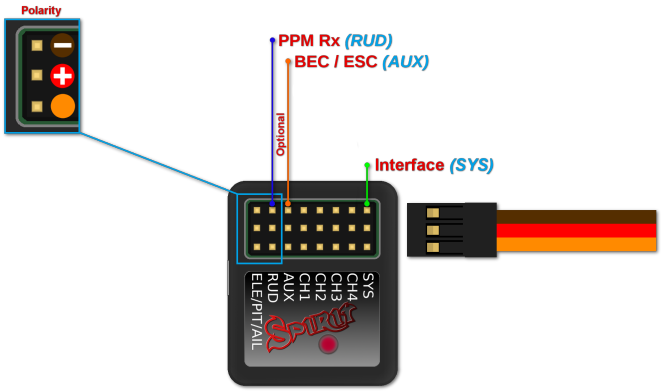

Spirit – receiver type: PPM

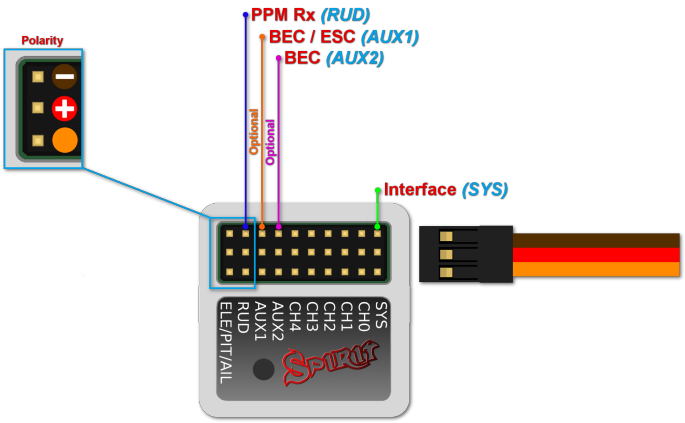

Spirit Pro – receiver type: PPM

Connection to a BEC is optional. For models of 500 size and larger it is recommended to use dual power supply cables due to the increased power consumption. That means besides the communication cable, an additional power supply cable should be connected to the AUX port.

When using this type of receiver you can connect the throttle cable directly to the receiver. Alternatively, you can assign the throttle channel in the software and use the AUX as throttle output from the unit.

Never plug a connector for powering the unit to SYS or ELE/PIT/AIL ports.

Futaba pilots with PPM receiver such as R6107SP will need to reconfigure channels according Futaba PPM page.

8 CONNECTION OF JETI EX BUS RECEIVER

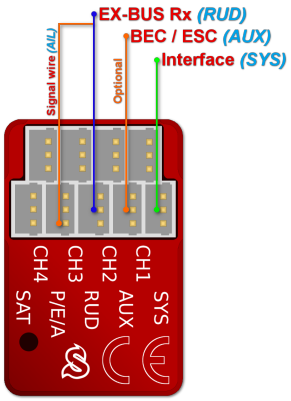

µSpirit – receiver type: Jeti EX Bus

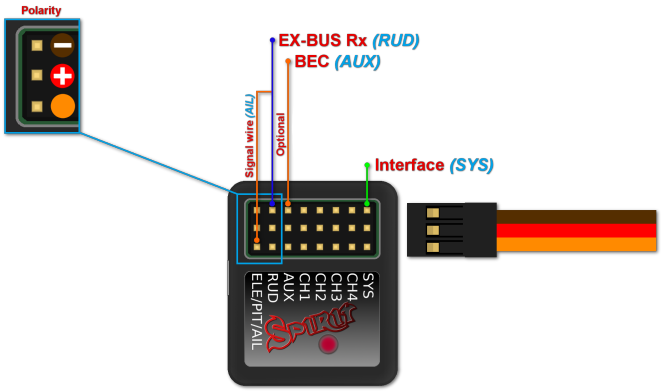

Spirit – receiver type: Jeti EX Bus

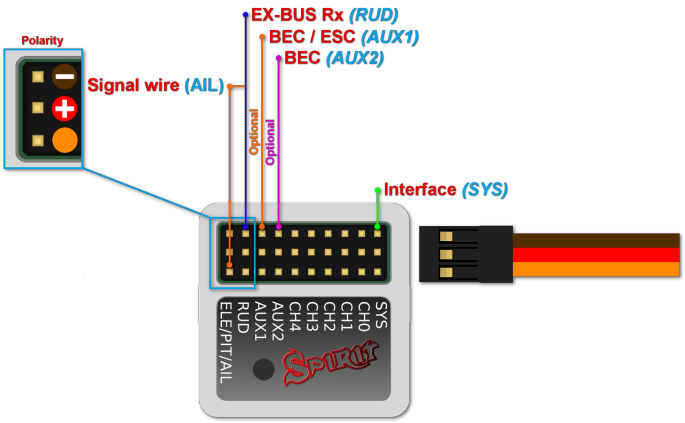

Spirit Pro – receiver type: Jeti EX Bus

This connection type now supports the new integration with JETI Model transmitters. You can now fully configure the Spirit unit remotely through the JETI Model transmitter.

Remember to configure the receiver type through the software or the integration will not work. Also, it is necessary to download Spirit.bin file from the website. Move the file to the Devices directory in the SD card of your transmitter.

For futher instructions please check the Jeti Integration page.

Connection to a BEC is optional. For models of 500 size and larger it is recommended to use dual power supply cables due to the increased power consumption. That means besides the EX Bus cable, an additional power supply cable should be connected to the AUX port.

When using this type of receiver you can connect the throttle cable directly to the receiver. Alternatively, you can assign the throttle channel in the software and use the AUX as throttle output from the unit.

A special cable is needed to enable this communication. Signal wire (Orange) is connected to the AIL pin, while power wires (Red and Brown) are connected to the RUD port in the unit. For JETI REX receivers, end of the special cable is connected to the EX1 or EX2 (depending on the receiver configuration). For EX receivers, please use EXT port.

Never plug a connector for powering the unit to SYS or ELE/PIT/AIL ports.

9 CONNECTION OF SRXL/SUMD RECEIVER

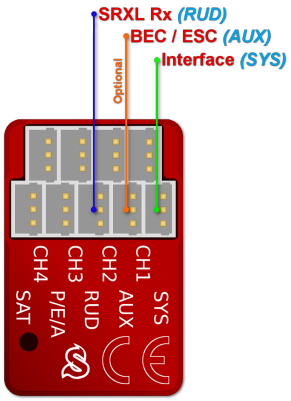

µSpirit – receiver type: SRXL/SUMD

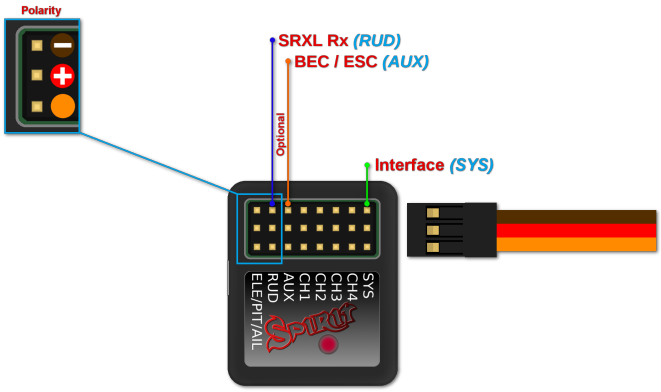

Spirit – receiver type: SRXL/SUMD

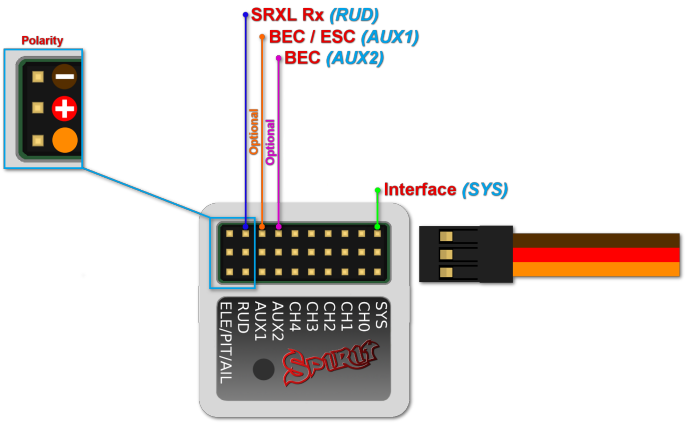

Spirit Pro – receiver type: SRXL/SUMD

Connection to a BEC is optional. For models of 500 size and larger it is recommended to use dual power supply cables due to the increased power consumption. That means besides the communication cable, an additional power supply cable should be connected to the AUX port. This protocol family can work with a wide range of receivers. Thus you can use Multiplex SRXL, BeastX SRXL, Graupner SUMD, Jeti UDI, Spektrum SRXL, JR X-Bus (mode B) and more.

When using this type of receiver you can connect the throttle cable directly to the receiver. Alternatively, you can assign the throttle channel in the software and use the AUX as throttle output from the unit.

Never plug a connector for powering the unit to SYS or ELE/PIT/AIL ports.

10 CONNECTOR ORIENTATION

10.1 µSpirit

⚠ Pin layout of the **JST-ZH(R) connectors is different** from standard Servo connectors. BROWN (Middle) wire is GND pin. ORANGE wire is SIGNAL pin. RED wire is +5V (BEC voltage). By using **JST-Servo** cables you can connect a classic Servos and all Spirit peripherals to the µSpirit even with Servo connectors.

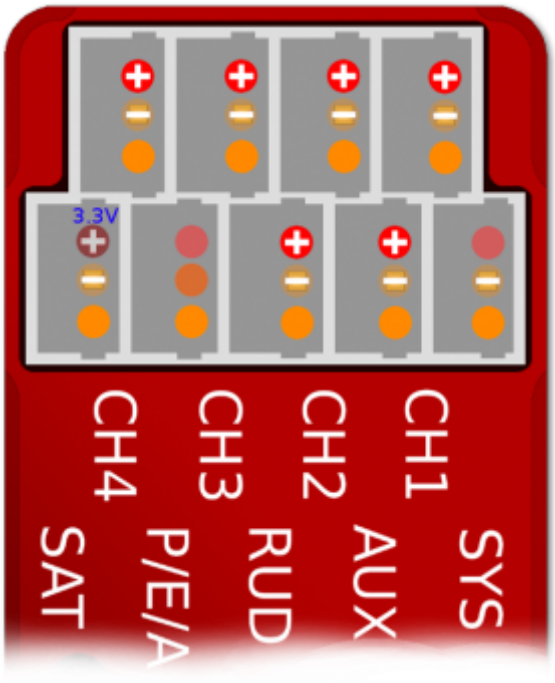

10.2 Spirit and Spirit Pro

All cables connected to the unit must be oriented so that the signal wire (Lightest color wire) is closer to the connector pin label, towards the center of the unit. This orients the negative (darkest color wire) toward the edge of the unit.

Configuration

Configuration is the next and one of the most important steps for correct operation of the system.

Configuration is performed using the software, which combines efficiency and simplicity while offering adjustable parameters, including advanced parameters.

The software offers the Setup Wizard. It is highly recommended to use the wizard as it will guide you through entire configuration from the beginning to the first flight.

Contents

1 CONNECTION TO PC

Before you begin the actual configuration it is necessary to connect the system to a computer via a USB port. Depending on the operating system and computer, a driver may need to be installed after connecting the cable to the USB port.

The Spirit Settings is available for the following operating systems:

- Microsoft Windows
- Apple OS X
- GNU/Linux
- FreeBSD

Once connected and the driver is installed successfully a new virtual COM port should be visible in the software and device manager.

MICROSOFT WINDOWS
Install the driver via the software installer. This process will be described in a following section.

APPLE MAC OS X
For proper functionality it is important to download and install the driver from the following URL: http://spirit-system.com/dl/driver/SiLabsUSBDriverDisk.dmg

GNU/LINUX & FreeBSD
Nothing needs to be installed.

1.1 WIFI-LINK

The Spirit Settings software can be connected with Wifi module from now. It is called *Spirit Wifi-Link*. Wifi-Link can completely replace the USB interface. Thus user can perform all the settings wirelessly. You can find description of the connection at the Wifi-Link instruction page.

2 CONNECTION WITH THE UNIT

If you have already attached the USB interface to your computer, next connect the interface cable to the **SYS** port of the Spirit FBL unit. The Spirit FBL unit can not be powered from the USB cable/SYS port so it is necessary to power it from either the receiver, a BEC or an external battery pack. The RUD and AUX ports are used to power the Spirit FBL unit and if using a BEC or battery pack it is suggested to connect to these ports with a voltage between 3V and 15V. The middle wire must be the positive voltage connection.

Never plug a connector for powering the unit to SYS or ELE/PIT/AIL ports.

If the unit is not configured yet (e.g. a new unit) it is advised to not connect any servos yet.

3 SOFTWARE INSTALLATION

Below are the installation instructions for the supported platforms. The configuration software is available on the Spirit System website:spirit-system.com/ (http://spirit-system.com/).

MICROSOFT WINDOWS

Run the installer and follow the wizard. If the driver is not installed yet, you will be given the option to do so during the installation process. The installer will go through all the necessary steps to prepare your computer for running the configuration software. Upon completion of the installation process, the configuration software can be launched from your desktop or program list, called "Spirit Settings".

APPLE MAC OS X

Install the downloaded software by opening the DMG file and then moving the content to your Applications folder. Configuration software can be launched from the Applications folder with "Spirit-Settings".

GNU/LINUX a FreeBSD

Extract all the files from the downloaded archive to, for example, your home directory. Configuration software can be launched from the newly created directory with the file „settings.sh".

4 SOFTWARE STARTUP

Once the software is installed, ensure your Spirit unit is connected via USB to the SYS port, powered on and initialized (LED lights are on), then run the software on your computer.

Start the Spirit Settings from your desktop or a directory where it was installed.

> ℹ The configuration software should be started after the unit has initialized. Whenever the Spirit FBL is initialized (status LED is on) and connected, you can make adjustments to the settings. Configuration during flight is not possible due to the associated safety risks.

PROBLEMS ON WINDOWS

If the configuration software is unable to detect a valid COM port, you can try starting the software as Administrator. Alternatively, check the COM port number. If the value is too high try reconfiguring the port number (Silabs device) to, for example, COM1 – COM4. For notebooks it is also worth disabling any USB power saving features in Device manager.

PROBLEMS ON MAC

If the configuration software is unable to detect the USB interface, make sure that the Driver (http://spirit-system.com/dl/driver/SiLabsUSBDriverDisk.dmg) is installed. It is very important that the version is correct else it can lead to an instability.

5 SOFTWARE USAGE

After successful connection of the Spirit FBL unit, all configuration features should be accessible. If not, try to either choose another COM port (Device) or try to restart the software, disconnecting the unit from the power supply and repeating the procedure.

Make sure the software is launched after the unit has initialized.

5.1 CONNECTION TAB

This tab indicates the current status of the connection, informs you about the current version of the firmware, displays the serial number of the connected unit and allows you to change the COM port. In addition it features a wizard for initial setup.

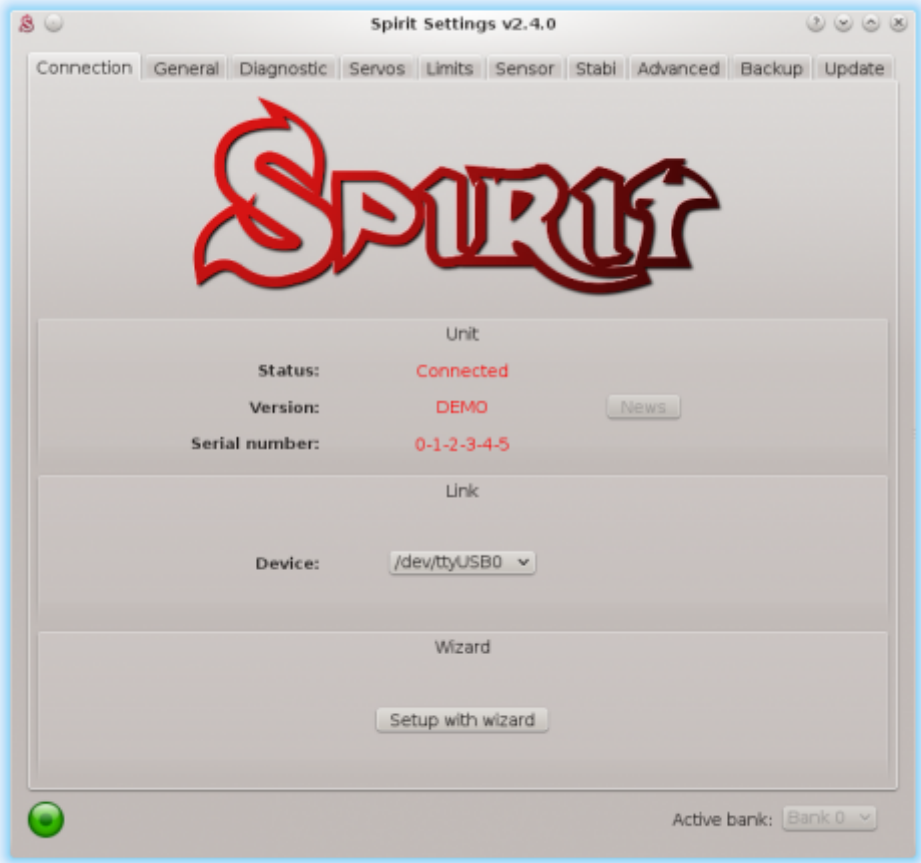

We recommend using this wizard, as it will guide you through a basic setup in the easiest and simplest way.

5.2 GENERAL

If you have already set up the unit using the wizard, you can make additional adjustments to your setup here. All values relate to the settings you selected in the wizard.

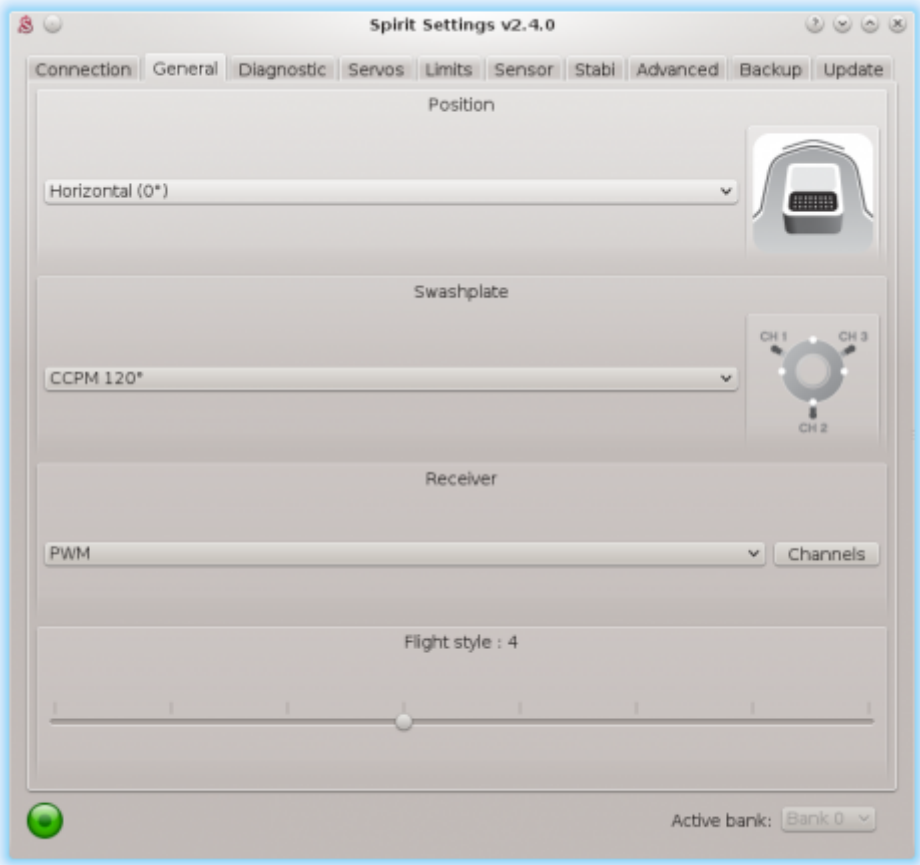

Whenever parameters are changed, the new value is immediately applied but not saved. Unless settings are manually saved, after disconnecting the power supply all unsaved changes will be lost. (see Backup tab.)

Position

Selects the position in which the unit is attached to the model. *(See section 3 - Installation)*

Swashplate

Select the swash type of your model. In most cases it is *CCPM 120° or CCPM 120° (reversed).*

Any swash mixing in the transmitter must be turned off. It must be configured to H1 (single servo) type.

Receiver

Select the type of receiver you are using:

- *PWM* – standard receiver.
- *PPM* – single line connection.
- *Spektrum DSM2/DSMX* – DSM2 or DSMX satellite. (for Spektrum integration).
- *Futaba S-BUS* – receiver connected via SBUS. (for Futaba telemetry)
- *Jeti EX Bus* – receiver connected via EX Bus (for JETI model integration).
- *SRXL/SUMD* – receiver connected via SRXL, SUMD, UDI (for HoTT integration).

Flight style

Sets how the model will behave in flight. This parameter is used to control and adapt flight behavior according to the requirements of the pilot. It has significant impact on a pirouetting maneuvers (cyclic steering), but not pirouettes (rudder) itself. Parameter has no impact on a stability. Generally, for bigger models higher value is recommended.

Lower values mean that the model will behave in a more consistent, controlled manner and will feel more linear and robotic. It could introduce a delay to the steering. Angular momentum will be held more constantly.

Higher values mean a more natural behavior. The response to stick movements will be more flybar-like where fast movement will introduce agressive response. But a small movements near the center will be more precise. It can help to make tic-tocs faster. End of each cyclic input will become faster.

Recommended value for the most pilots: 4.

Channels

After clicking the button, the window with channel assignment is displayed. You can assign any channel to any function here. The number of available channels is dependent on the receiver type. Remember to only assign one channel to each function.

When a channel for *Throttle* function is assigned, throttle output from the unit can be obtained from the AUX position. When a channel for Bank function is assigned, then Bank switching is activated *(See chapter 5.6)*.
When a channel for *Gyro Gain* function is unassigned, it is possible to configure gyro gain directly through this software in Sensor tab. The unassigned channel could be used in another way, e.g. for Bank switching.

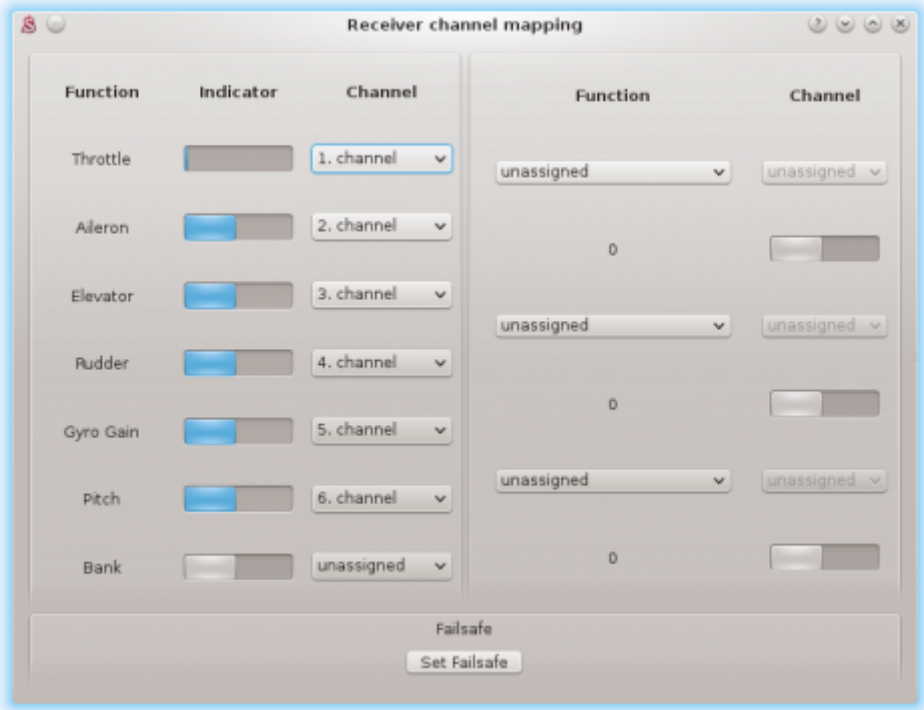

Failsafe

For a PPM, Futaba S-BUS, Spektrum DSM2/X, Jeti EX Bus, SRXL/SUMD receiver types you can set the Failsafe directly in the unit. Channel values are stored immediately after clicking the Set failsafe button. In case that the signal is lost for more than 1 second it will set the values automatically in the flight.

With other receiver types the Failsafe is programmed in the transmitter or receiver.

Realtime tuning

By assignment of a parameter *(P)* it is possible to change the settings directly from your transmitter. You can comfortable set selected parameter by changing channel value (for example by a potentiometer). Thus you do not need a configuration software at all. Usual transmitter is enough. A change in corresponding channel will immediately change value of the parameter. Maximal deflection will set the highest value of the parameter, while the minimal deflection will set the lowest value. Realtime parameter tuning has the highest priority. So when enabled, saved value from the profile or a Bank will be ignored.

This functionality is enabled only when the configuration software is not connected. This will prevent from a possible collisions. As soon as the software is disconnected, selected parameter is configured by the channel value. In case that the software is started again, it will keep value from realtime tuning in it's memory. However, with opened software policy described above will be applied again (Realtime tuning is inactive and value will be intact even if channel is changed).

You can configure 3 different parameters and functions simultaneously with this feature.

If function *(F)* is assigned, it is engaged when it's value is equal to 1. Vibration analysis function allows you to measure vibrations during the flight. It is described later in the Diagnostic tab section.

When parameter tuning is complete, it is recommended to open the software and save the settings to the unit. Then unassign the parameter so the value can't be changed anymore.

> ℹ It is recommended to always carry extreme caution to not loose control of the model!

5.3 DIAGNOSTIC TAB

Once the settings in the previous tab have been completed, it is now recommended to make any adjustments and changes required in the transmitter so that the transmitter controls match the displayed system's outputs. Generally, each transmitter is different and the center of the channel is never exactly the same. Wear and environmental influences can also have an effect causing the center of the channels to fluctuate. Another consideration is the maximum and minimum value of each channel. Here, you adjust your throws using your transmitter's servo endpoint adjustments.

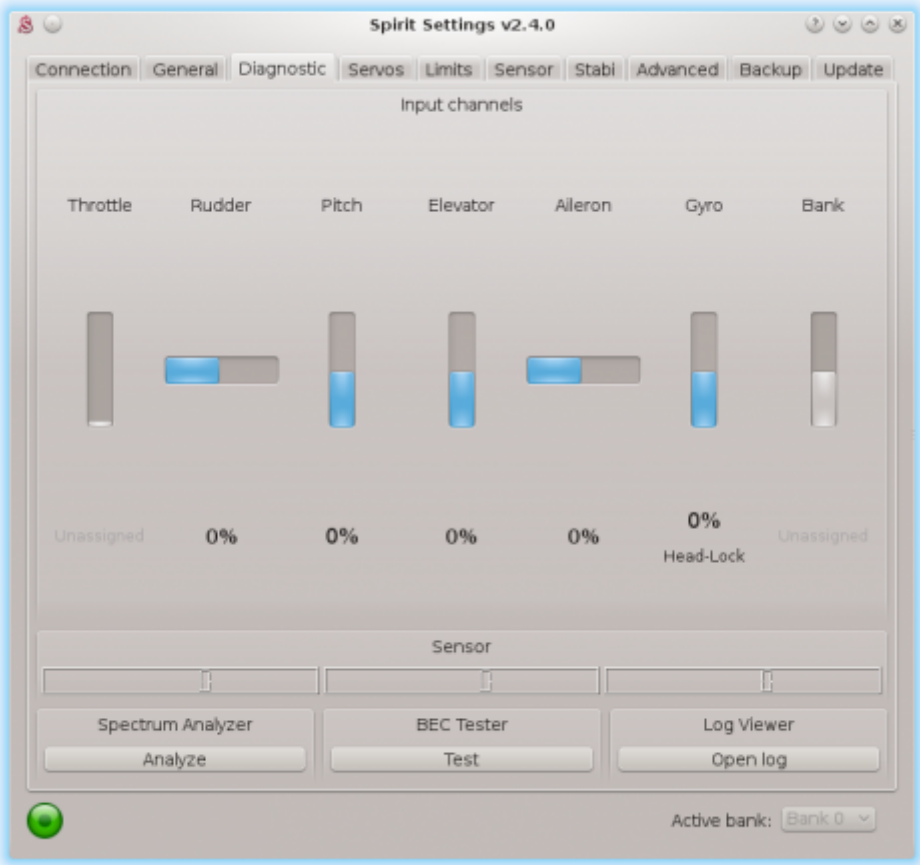

For a proper operation of the unit, it is necessary that movement of each channel correspond with the bars. Direction of the movement must match with the sticks as well.

Secondly, it is necessary to check the values of aileron, elevator, pitch and rudder channels. These channels must be centered at approximately 0%. The unit automatically detects the neutral position during each initialization. Do not use subtrim or trim functions on your transmitter for these channels, as the Spirit FBL unit will consider these as an input command.

Ensure all subtrims and trims are zeroed.

It is also recommended to set the maximum and minimum values. Test the minimum and maximum throws for all channels, if these values are not equal to -100% and 100% in the diagnostic tab it is necessary to adjust your transmitter endpoints to correct this.

After these adjustments, everything should be configured with regards to the transmitter. If some channels oscillate around the center, it may mean wear of the transmitter potentiometers. This can be compensated for by increasing stick deadband in the *Advanced tab.* (Covered later)

If the values in the aileron, elevator, or rudder channels are shown in bold, the system is recognizing a command to move/rotate the axes.

To determine Gyro Gain and Mode of the rudder gyro you can check Gyro bar.

SPECTRUM ANALYSER

The Spectrum analyser is a tool for measuring the amount of vibrations on your model. It is a diagnostic tool designed to determine which rotating part is causing a problem. With this information you can easily identify and fix any problems with your model.

To check condition of the model you can see "Vibrations" bar. This indicate general vibration amplitude in selected axis.

It is possible to measure vibrations in three separate axes:

- *X - elevator axis*
- *Y - aileron axis*
- *Z - rudder axis*
- *In-Flight - flight vibration player*

The live graph shows frequencies for the currently selected axis. This enables you to see both the frequency and magnitude of the vibration on the selected axis.

Vibrations are transmitted to each axes dependent on several, various factors. Frequencies and magnitude are dependent on the model construction. Generally, the vibrations are the highest on Y axis (aileron) but we recommend you check all axes each time you are doing measurement. However vibrations should not exceed 50% for all axes at any time. In the case vibrations are at 90% or more, the model has an issue that needs to be rectified. Should the magnitude exceed 90% on any of the given axes, it is recommended to fix whatever issue is causing these extreme vibrations before flying the model. Even though Spirit FBL unit is highly resistant to vibrations, these could cause unwanted interactions with the Spirit FBL unit and could also cause mechanical failure of the model. Such high vibrations can cause Loctite to fail and other mechanical parts to break.

Vibration levels:

- Vibrations up to 50% - vibrations at a normal and acceptable level
- Vibrations between 50% and 90% - raised vibration levels
- Vibrations exceeding 90% - extreme vibration levels

As well as overall vibration levels not exceeding 50%, any specific frequency (peak) should not exceed 50%. Anything above this level should be cause for concern and requires further investigation.

For comparing the graphs, you can use the *Freeze* button. The current live graph is displayed and the graph captured using the *Freeze* button is saved and will be displayed as subgraph. This graph can be deleted with the *Clear* button.

It is possible to save the Spectrum analyser graphs. Using the *To image* button, the current graph will be saved as an image.

The Spectrum analyser is able to detect the vibration frequencies up to 500Hz (rotating parts at speeds up to 30,000 RPM).

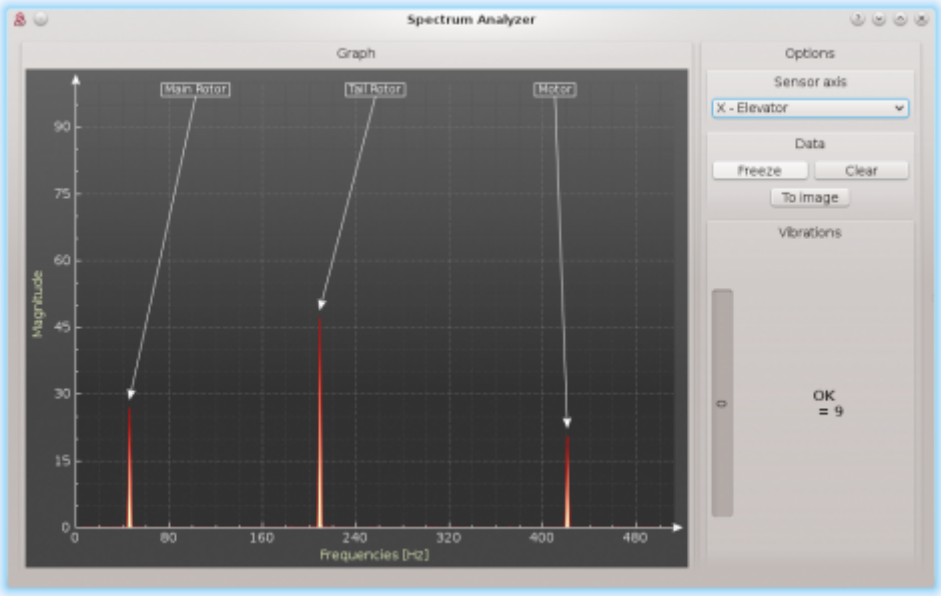

Measurement procedure

1. Remove main and tail blades from the model.
2. Place the model on a suitable, soft surface (e.g. carpet, grass).
3. Set blade pitch at approximately 0° on both main and tail rotors.
4. Run the Spectrum analyser (this also freezes all servos).
5. Spin up the motor to the usual flight RPM.
6. Switch between the X, Y and Z axes, saving an image of each.
7. Check vibrations in all axes.
8. Stop the motor.

Recognizing vibrations

To recognize which component or part is causing abnormal vibrations it is necessary to determine the speed of the highest peaks. The main rotor will have the lowest speed and the tail rotor speed will be approximately 4.5x higher. Generally, the smaller the size of the model, the higher the headspeed will be.

In order to find out which part of the model is causing the unwanted vibrations, move cursor to the peak and check the head speed (RPM). The speed of the main rotor is usually in the range of 1500 to 3500 RPM. Therefore, if the speed is within this range, it is likely that there is a problem with the main gear, main shaft, main shaft bearings or rotor head itself.

Most excessive vibrations are usually, although not always, tail related. To check if there are vibrations coming from the tail you should find the frequency peak that is approximately 4.5x higher than the frequency of the main rotor.

Once you identify which part of the helicopter is causing the unwanted vibrations, you can gradually remove components of the suspect assembly, repeating the measurement process until the vibration disappears. Once the vibration levels have dropped to an acceptable level, you have found the suspect component and can replace it.

Measuring with tail blades installed carries some safety concerns and will also show increased levels of vibration.

Gasser motors shouldn't be operated without load! Vibration measurement can't be performed without blades.

In-Flight - vibration analysis from flight

This feature allows you to record vibration spectrum from any moment of the flight. By selected channel you can tell the unit when the spectrum should be taken. The spectrum can be later viewer in the Spirit Settings software with the *In-Flight* option in the Diagnostic/Spectrum analyzer. Saved vibration spectrum will be stored until unit will lost the power. Saved record is rewritten on repeated activation.

For vibration measurement in the flight set the Special function in the General/Channels. Assign function *F: Vibration analysis* with axis you want to measure. Then select a channel which will be used for activation of the function.

As soon as the value is equal to 1 the vibration spectrum is saved. The record is saved exactly at the moment when function will change it's state from 0 to 1.

During flight it is enough to change state of selected switch of your transmitter (for example 2-state switch). After landing you can connect unit with the software and open the Vibration analyzer (select *In-Flight* axis to display the spectrum).

BEC TESTER

The tester is used for determining whether your power supply for the unit, receiver and servos is sufficient. The purpose is to achieve the biggest current spike and verify that your supply voltage will not drop under the safe level.

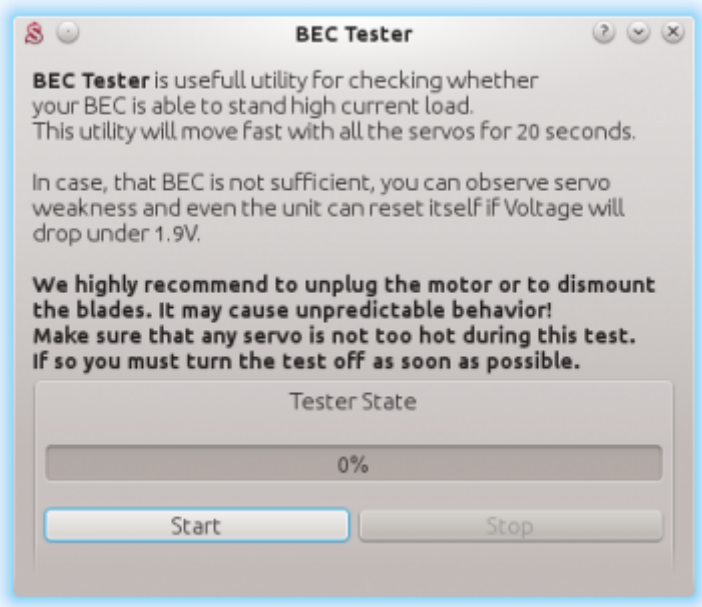

Click the *Start* button to start the test. After 20 seconds it should be finished. If you will observe any issue, then your power supply is insufficient and should not be used. In this case power supply with higher current rating should used.

LOG VIEWER

The log is used to record events during flight. If a problem occurs and the reason isn't immediately known or evident, checking the log can help in identifying the issue.

It works in such a way that it records various events from the time the unit is powered on. If an event occurred you can see this in the log, reporting to the log is done every 10sec. When you click the *Open log* button you can see the current flight log which contains all the events from the last flight. When the power is disconnected, the log is cleared.

In the case of a major problem occurring during the flight ⚠, the log is then saved permanently to the unit's memory and remains there until such time as the log is opened. If there is a saved log in memory, the user is advised with the message "Log from previous flight is available!" and the log from the flight when the problem occurred is opened. For example, when a signal is lost or the power supply failed you can find this in the log. The log from the first flight where the major problem occurred is always saved. If this is not opened, then it will not be overwritten with a newer one. In this state, the user is also notified by different cyclic pitch pump during the initialization process - elevator servo will change it's movement direction.

The log can contain the following events:

✔ Good Health Message:

The model is in good condition. The unit did not recognize any problems.

ℹ Calibration Finished:

Sensor calibration was successful.

ℹ Governor was Engaged:

Governor achieved requested RPM and is active from this moment.

⚠ Cyclic Ring Activated:

Cyclic achieved its maximum tilt angle. This indicates the model was unable to do the desired correction as necessary. In most cases it is not relevant. But it is possible that the value of the Cyclic Ring parameter is too low and the model can't rotate as fast as intended in the aileron/elevator axes. Alternatively, a too high value for rotational speed could be configured. It is also possible that in fast forward flight the model can pitch-up rapidly. We recommend to set this parameter as high as mechanically possible.

⚠ Rudder Limit Reached:

The rudder servo reached its configured limit. When this event occurs before or after a flight it is not a problem. If you see this during flight it indicates that the rudder did not operate correctly. In most cases it is visible during flight as poor rudder response or "blow out". If the model is set up correctly then it could be due to low rudder efficiency such as the tail blades being too short or headspeed too low. There is also the possibility of a mechanical issue or with the rudder limits being inadequate.

⚠ RPM Sensor data are too noisy:

RPM readout is very unstable and are oscilating more than +/- 100 RPM. Data from the sensor are unusable for the Governor. Use additional shielding and mount a ferite rings. Increase value of the

RPM Sensor filter parameter in the Expert settings.

⚠ Received Frame was Corrupted:

Received frame is unusable and will be ignored. In the most cases it does not present any problem. If the event is occuring often, then connection between receiver can be wrong or there is excess noise. Verify quality of the link and check the cable between unit and receiver.

⚠ RPM Sensor data are lost:

Sensor data reading failed - RPM sensor malfunction probably occured. Sensor is not sending data for 2 seconds or longer. Make sure, that the sensor wiring is correct and that the motor is spinning when Hold is disarmed.

⚠ Receiver Signal Lost:

Signal lost suddenly. This problem should not occur at any time and must be resolved before the next flight. There could be a problem with the receiver and/or transmitter antennas. It could be a faulty receiver cable or the connection between the unit and receiver. In some cases signal loss can happen because of electrostatic discharge caused by static build up, this usually occurs in belt driven helicopters.

⚠ Main Loop Hang Occurred:

The main loop was delayed. This can happen when wiring is incorrect or there is abnormal electrical noise interference with the unit, for example, from a BEC. If using the configuration software it could mean the link to the Spirit FBL unit is slower than it should be.

⚠ Power Voltage is low:

Power supply voltage is lower than 2.9V. This mean you have to use a BEC that is capable of handling higher loads. In rare cases it could be faulty connections in cables.

⚠ Vibration Level is very high:

Vibration level achieved the level that is not normal and can affect integrity of the helicopter. During hard 3D maneuvers the event can occur more frequently.

All reviewed logs are saved as PDF files into Documents directory.

5.4 SERVOS TAB

This tab is used for servo configuration, care should be taken to ensure correct frequencies are used and that the directions are set correctly.

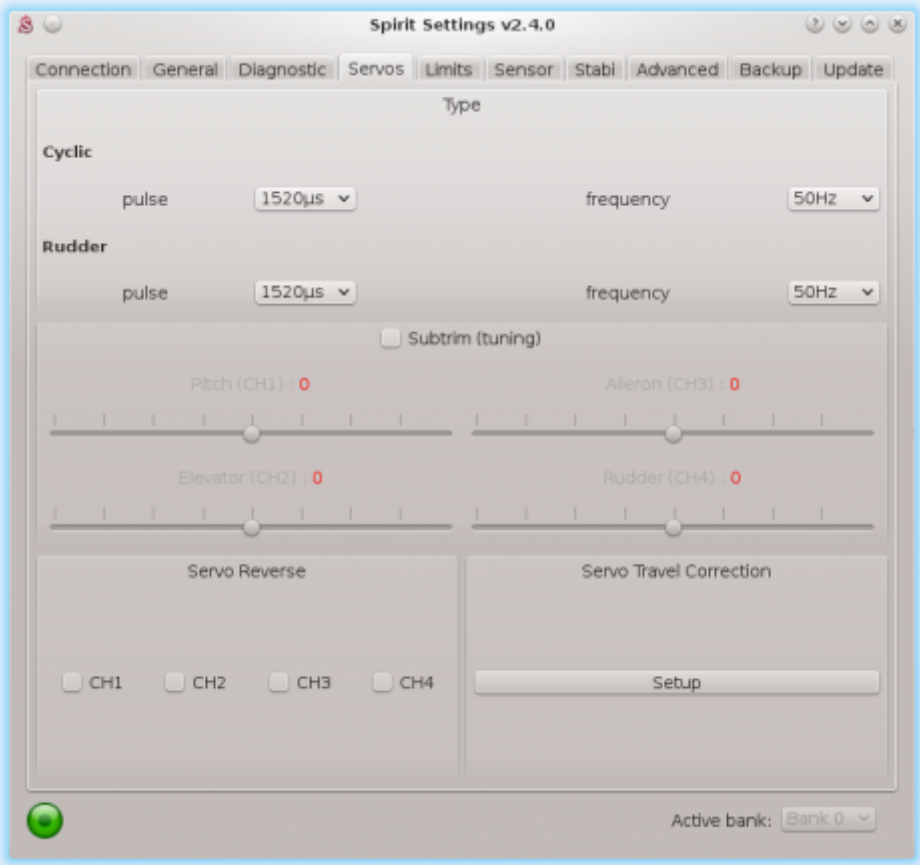

Type

In this section, set the values for neutral pulse and frequency according to your servo manufacturer specifications. For analog servos the frequency is usually a maximum of 60Hz.

Subtrim (tuning)

Ideally, without the rotor head installed, use a swash leveler to align the swash and servo horns so that the swashplate and servo horns are horizontal and perpendicular to the main shaft. This is done by ticking the item Subtrim (tuning). This will put the Spirit FBL unit into a special mode where the collective position will be neutral with the servos centered. In addition, stabilization will be disabled. Servos can easily be adjusted at this time. When completed, the swashplate should be exactly perpendicular to the main shaft and in addition collective pitch should be at 0° (it is possible to measure the pitch angle using a pitch gauge with rotor head and blades attached).

In most cases, it is also necessary for servo horns to be perpendicular to the main shaft. All servos, i.e., CH1, CH2, CH3 and CH4, are set separately on individual sliders. CH1 and CH3 are the aileron servos. CH2 controls the elevator and CH4 controls the rudder.

It is also necessary to set the subtrim and mechanics of the rudder so that the servo horn is perpendicular to its case and rudder pitch is at 0°. This setting will affect rudder stop performance.

Once set up, un-tick the *Subtrim (tuning)* check box to turn off this special mode.

After exiting the special mode, stabilization and rudder will work again. Be sure your collective pitch channel is configured correctly in the transmitter. That means you should see -100% to 100% in the diagnostic tab. Double check that 0% in diagnostic tab corresponds with middle position of your collective/throttle stick (with linear -100% - 100% collective pitch curve).

Servo reverse

This allows you to choose which servos should have their direction of motion reversed. While changing the collective pitch all servos should move in same direction. After this settings the model should react correctly to the sticks movement. **This parameter is the most important!**

Servo travel correction

Here, you are able to modify and correct travel for each servo individually. Some servos are not very accurate in regards to travel at their limits and this inaccuracy may have a negative impact on flight characteristics. Once in this section of the software, the unit switches to a mode for doing these corrections.

It is expected that in the previous step, *Subtrim (tuning)*, the swashplate was set at zero collective (0° rotor blades pitch). The procedure is such that you should use a swash leveler to determine whether there is any deviation on any of the servos in the lowest and highest points of collective throw. For both positive and negative positions, it is necessary to set the values separately – this is the reason for 6 sliders. If the travel is less than required, increase the value. If too much, decrease. To activate sliders in the secondary part move your collective to opposite direction.

This correction is also useful if there is asymmetric geometry on the helicopter causing issues such as the inability to achieve equal positive and negative pitch values. In this case, it is necessary to modify the positive or negative sliders for all three servos. If you are unsure about your settings, it is better to leave the sliders in the Middle. (position 0)

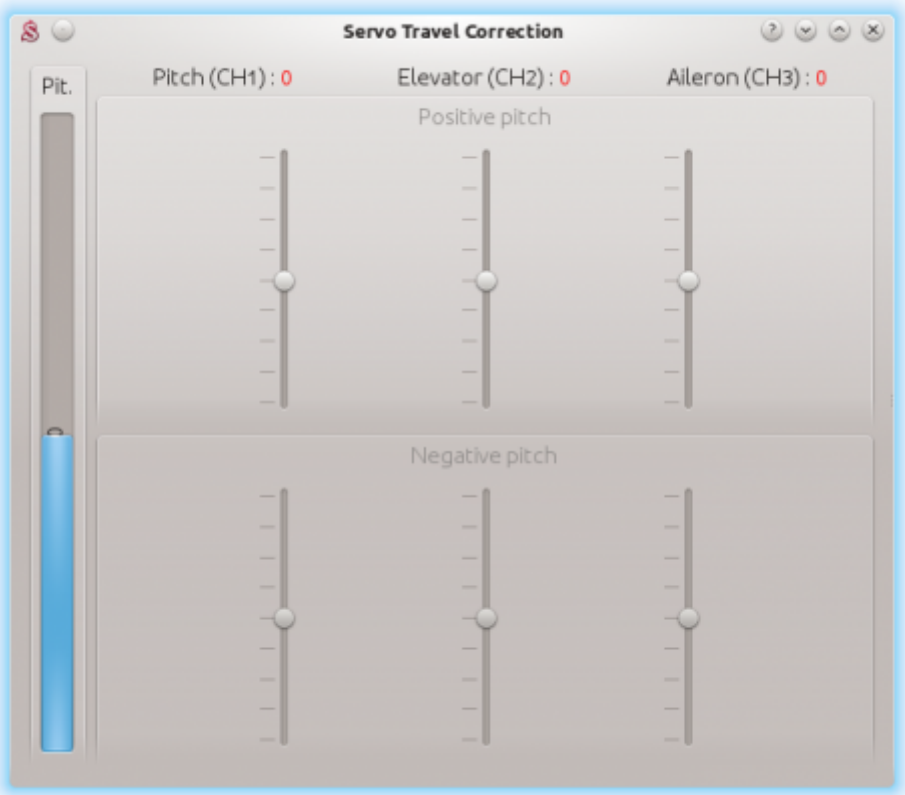

5.5 LIMITS TAB

This tab affects limits and servo travel ranges.

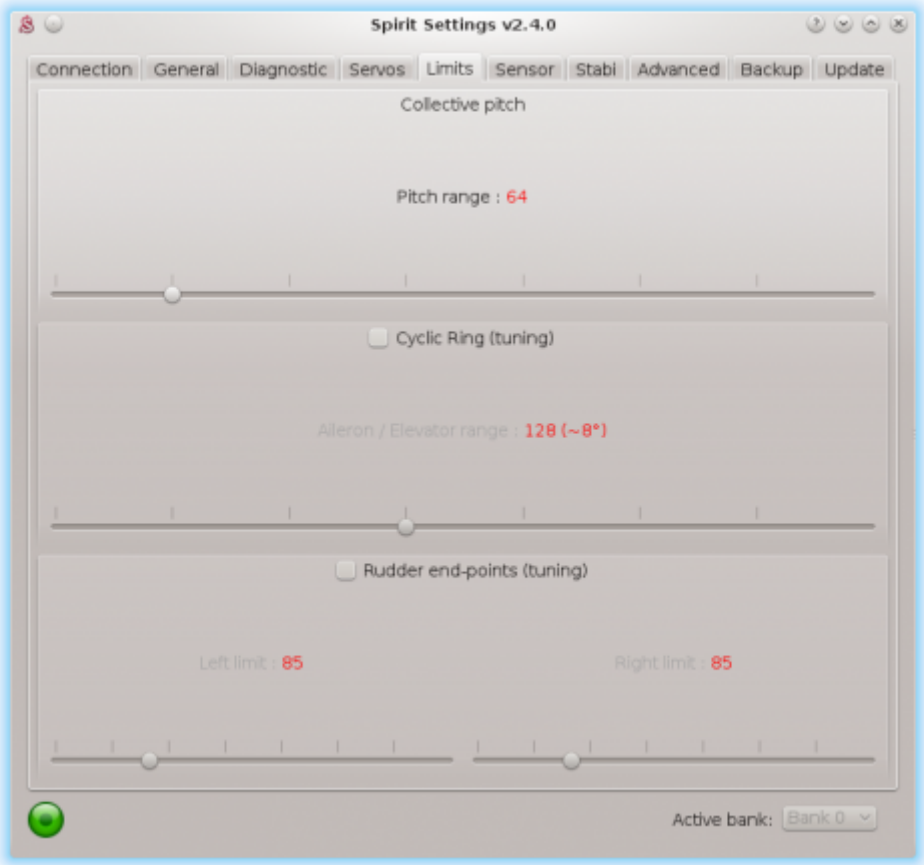

Cyclic Ring (tuning)

This parameter sets the electronic cyclic ring, which allows the model to achieve the largest cyclic ranges without mechanical binding (binding of servo horns, pushrods and linkages).

> The settings here should be done very carefully to avoid damage to the model or it's associated electronics. Never exceed recommended angles by manufacturer of the model, otherwise a boomstrike can occur.

First, set your desired *Collective range*, for example, +/-12°. We recommend using a -100% to 100% linear collective pitch curve in the transmitter. Now it is time to set the *Aileron/Elevator* maximum cyclic pitch range.
Try to set the largest possible deflection. Generally the Cyclic pitch angles (range) should be equal or lower than Collective pitch. This parameter does not directly affect the speed of rotation, but if it is too low, the model may not have consistent pitch and roll rates. The setting should be done with 0° collective pitch. Then carefully move with sticks in all directions to ensure that mechanical binding does not occur. This should also be done for the maximum and minimum Collective pitch.

If you increase the collective pitch range, this parameter must then be checked and in some cases adjusted to ensure no binding occurs at your new maximum and minimum pitch ranges. If the selected cyclic ring range is insufficient, it is possible that pitch-up can happen during fast forward flight (even if the pitch-up compensation is at its maximum value). This is because the model will not be able to add sufficient corrections with the configured range.

Rudder end-points (tuning)

Left / Right limit - Sets the minimum and maximum deflection of rudder rotor blades. We recommend setting these values for both directions to the maximum allowed range by the manufacturer of the helicopter. Otherwise, the rudder may not be able to keep the yaw direction during demanding maneuvers and tail blow outs may occur. Do not exceed allowed limit for your model.

> **Micro helicopters and µSpirit:** When Tail rotor is driven by a dedicated motor, the Rudder ESC must be connected to the CH4 port. Rudder end-points are then used to set available Throttle range for the Rudder ESC from 0% (Right) to 100% (Left). We recommend to set Right limit to 126 and Left limit to 150 for the beginning.

5.6 SENSOR TAB

This tab is the last important part of the settings which must be configured.

Sensitivity

The rotary dial adjusts the gyro sensitivity for aileron, elevator and rudder axes.

Cyclic gain – The higher the value is, the higher the accuracy within the control loop. The default value is preconfigured to 55% gain, for most models an optimal value of around 60% is suggested.

Rudder Common Gain – 1.00x means no multiplication. This is the recommended value for 550-class helicopters and smaller. For bigger helicopters it is often higher. 1.3x could be fine. Gyro Gain in your transmitter should be configured to approximately 50% for the first flight.

Rudder Gain – This parameter is enabled only in case of unassigned Gyro Gain channel. It replaces function of Gyro Gain from the transmitter, so you can directly set the value in the software.

Rudder Gain in the software or in your transmitter can be programmed in this way:

- Head-Lock mode: 1% to 100%
- Normal (Rate) or a special function: -100% to 0%

Negative gyro gain can be used to activate the rescue or the stabilisation modes – check the Stabi tab.

Some transmitters have a gyro range of 0 to 100% where 50% is the middle - zero gain (e.g. Spektrum DX6i). Others use a range of -100% and 100%, where 0% is the middle.

Rotation speed

The default value is 8 and will favor beginners more, the higher the value, the faster the rate of rotation. This factor also depends on the mechanical linkage ratio or D/R (Dual Rate) in the transmitter and also on the Aileron/Elevator limit. Make sure the value is not too high else it can cause unwanted and inprecise movements.

default value - 8

We recommend to set the Cyclic rotation rate within a range of 8 - 11. Remember that DFC rotor heads tend to rotate faster so it's better to initially start with a lower value for them.

For the Rudder rotation rate pilots are preferring a range of 9 – 11.

5.7 STABI TAB

The Spirit unit offers you the options of model stabilization and rescue mode.The stabilization function, once activated, will recover the model to a horizontal position without any other input from the pilot, this can be used as a "bail-out" feature when trying new maneuvers and can help with the learning process.

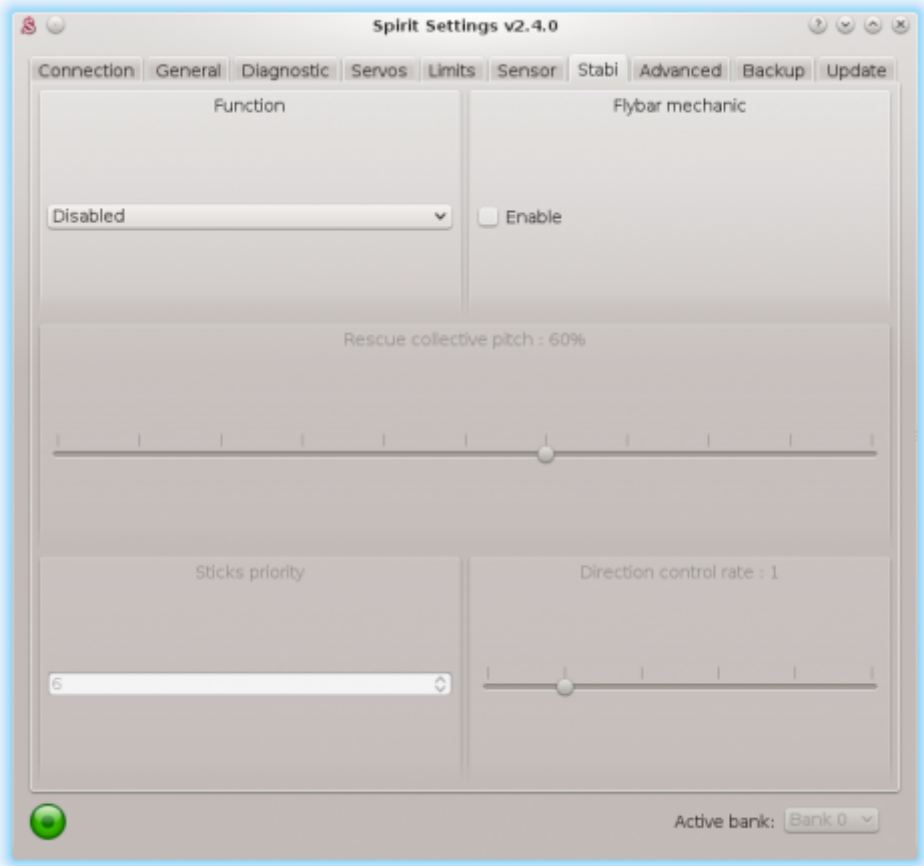

Rescue mode complements the normal operation of the Spirit unit. If activated, the model will recover to a horizontal position and add collective pitch as per the settings. This function can be used any time when the pilot loses orientation or control of the model.

How to setup the Rescue or Stabilisation is described in the Stabi mode page.

From version 2.3.0 you can activate selected *Function* by two different methods:

- **Negative Gyro Gain**
- **Separate Channel** *(NEW)*

Negative Gyro Gain method is suitable for radios with low channel count (6 - 7). When you have available unused channel, method with a Separate channel is better and easier.

Currently selected mode is displayed in the Diagnostic tab.

Function
Here is where you select which mode should be activated at negative gyro gains.

- Disabled - Normal (Rate) gyro mode.
- Rescue (Normal) - Recovers the model to an upright horizontal position – skids always to the ground. This recovery mode is great for the beginners.
- Rescue (Acro) - Recovers the model to a horizontal position, inverted or upright, whichever is closer at the time of activation. For intermediatte and advanced pilots that are flying acrobatic manouvers.
- Stabilization (Normal) - stabilization mode - skids always to the ground. This mode is good for learning the basics such as hovering and slow transitions. Model is always pushed to the horizontal position.
- Stabilization (Acro) - stabilization mode - inverted or upright, whichever is closer at the time of activation. This mode is used for learning the basics of acrobatic maneuvers. If the sticks are in the center, the model has tendency for returning to the horizontal position.
- Stabilization (Scale) - stabilization mode - skids always to the ground. This mode is used for a scale flying. Gyro mode is Normal (Rate).
- Coaxial - stabilization mode - inverted or upright, whichever is closer at the time of activation. The steering behavior is very similar to a coaxial helicopters. Great for learning a hovering practices.

⚠ If using these modes, be sure your helicopter is initialized on a flat surface, not tilted to any side. Do not tilt the helicopter for more than 5 seconds.

⚠ **The rescue mode is very demanding on the BEC. Be sure your BEC can handle such peak loads. In case it is is not sufficient your model could crash! Never exceed angles recommended by manufacturer of the model, else the mechanics can be damaged during the flight!**

Flybar mechanic
If your helicopter is equipped with traditional flybar mechanics, you have to enable this

parameter in order to use the stabilization or rescue modes. All settings are the same for flybarred helicopters except this parameter.

> ℹ Flybarless helicopters must be configured and operated with the Flybar mechanic parameter disabled!

Rescue collective pitch

This determines how fast the model will ascend during the rescue mode. 100% means the maximum deflection of the blades, which was configured in the Servos tab. It is very important to check whether the rescue mode works correctly before the first flight (on the bench without the motor/rotors running). Collective pitch should be always positive with the rescue engaged - while helicopter is on the ground

Sticks priority

Specifies the amount of control while configured mode is activated. The higher the value, the more the model will react to stick movements.

Direction control rate

This specifies the rate of controlling direction for the stabilization mode. Low values are well suited for beginners to get coaxial like behavior. Higher values are more appropriate for scale flying.

Acro Delay

Specifies a time period for the Rescue (Normal), when the model is recovered from the inverted flight. Until the period is reached, the rescue has the same behavior as the Rescue (Acro). In this way, faster ascending to a safe level can be achieved.

5.8 ADVANCED TAB

This tab is for more advanced configuration of the Spirit FBL unit. It is recommended that you fully understand these parameters before adjusting them. However, it is essential to set geometry. Other parameters, however, depend on the preferences of the pilot.

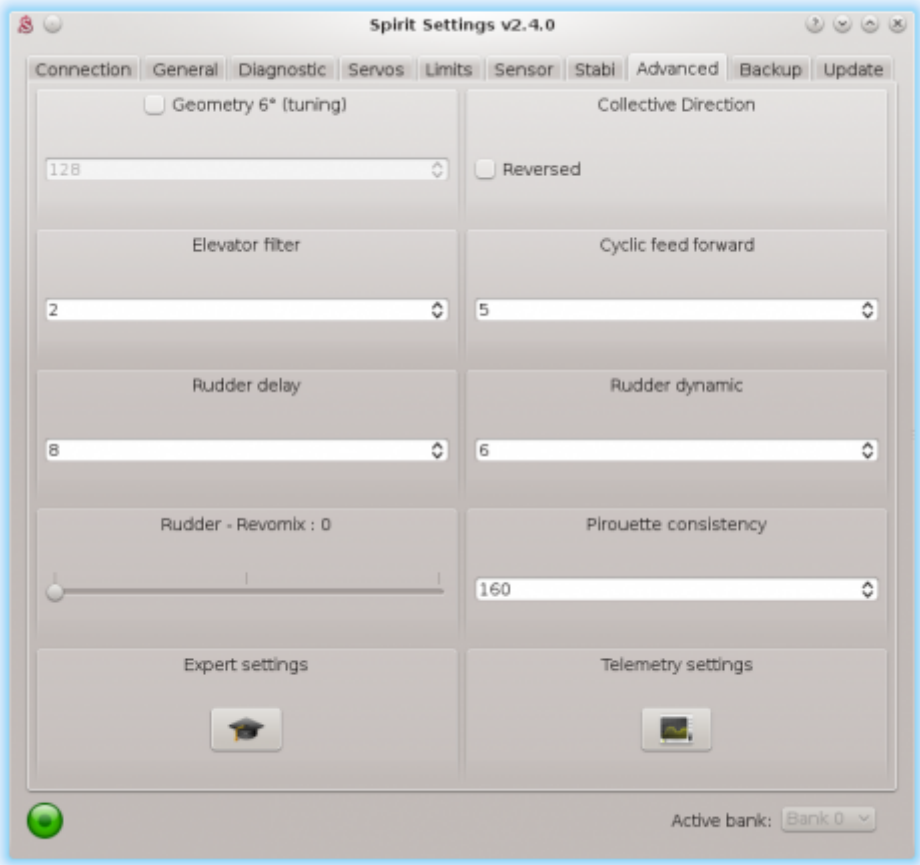

Geometry 6° (tuning)

For proper operation of the Spirit unit, it is necessary to set this parameter correctly. Here, the unit is switched to a special mode for settings 6° of cyclic pitch on the main blades. It is necessary to set the value so that the blades angle is at 6° in the aileron axis. You need to rotate your rotor head with blades to be parallel to the longitudinal axis of the model. A higher value increases the angle; a lower one decreases the angle. Optimal head geometry should be in the range of about 90 – 160. If not in this range, it is recommended to adjust the distance of a ball link on the servo horns or perform other mechanical adjustments.

Collective Direction

Parameter to determine direction of the collective pitch. In case of a Trailing Edge rotor head or if a mixing arms are present on the rotor head, tick the *Reversed option*. In the most cases the parameter is unticked.

> Correct configuration is very important, else the collective pitch will be reversed.

Elevator filter

This parameter compensates elevator bouncing during aggressive maneuvers. The larger the value, more compensation is involved. If this value is too high it can lead to a soft feeling in the elevator. We recommend using the default value of 1 to begin with.

Cyclic feed forward

This parameter is used to set amount of direct feel between your sticks and your model helicopter. The higher the value, the more aggressive the model will feel and the faster the

model will react to stick movements. If the value is very high, elevator bounce-back effect can occur. During a tic-toc maneuver you can also observe higher motor load or aileron oscillations, because the model is unable to react fast enough. Setting this value too high can result in elevator bounce. If the model feels disconnected and there is a lag between stick inputs and the model, try increasing this value.

Rudder delay

This is parameter to smooth out a rudder movements. It also helps to stabilize the rudder – it is a kind of electronic damping, similar to a derivative term of regulation. The faster the servo is, the lower the *Rudder delay* should be. For analog servos it is recommended to set this value to around 20 - 25. For slower digital servos it is mostly between 10 - 15. For fast servos (~0.04s/60°) the value is around 5. In case of a brushless servos it is recommended to set the value of 0 - 2. If the value is too high, the rudder could start to oscillate, wag or it could cause too smooth rudder stopping.

Rudder dynamic

If the rudder does not stop correctly, for example it overshoots, this behavior can be changed with this parameter.

6 – is the default value.

The larger the value, the more aggressive the behavior of the tail. If the tail overshoots in stops, the value is too high. This parameter also affects the response speed of the stick movement; a higher value means a faster response. If you cannot reach a symmetric stop on both sides you will need to make sure that the tail is centered at 0°. Alternatively, you can lower the rudder limit for that side.

Rudder – Revomix

Revomix (tail pre-compensation) adds rudder in response to collective pitch changes, when the tail needs increased holding. Revomix is independent of the transmitter. By default it is turned off, the user must set the amount required of the pre-compensation.

Allowed values are 0 to 10 with 0 being disabled; in most cases it is not necessary to use this parameter, however, when using low headspeed or on helicopters with a poor performing tail, this setting can be used.

Pirouette consistency

This parameter determines the consistency of pirouettes and holding performance. If pirouettes are not consistent during certain maneuvers, increase the value of this parameter. This value is individual for every model, it depends on many factors such as: your rudder mechanics, head speed, etc. Before setting this parameter, it is recommended to first set the gyro gains. If the value is too high, the tail can oscillate or wag. It can also cause poor stop performance. This value should be between 150 and 180. For brushless servos it is recommended to increase value by 10-15 points.

5.8.1 EXPERT SETTINGS

For fine tuning you can set the following parameters. Normally it is not needed to configure any of these parameters.

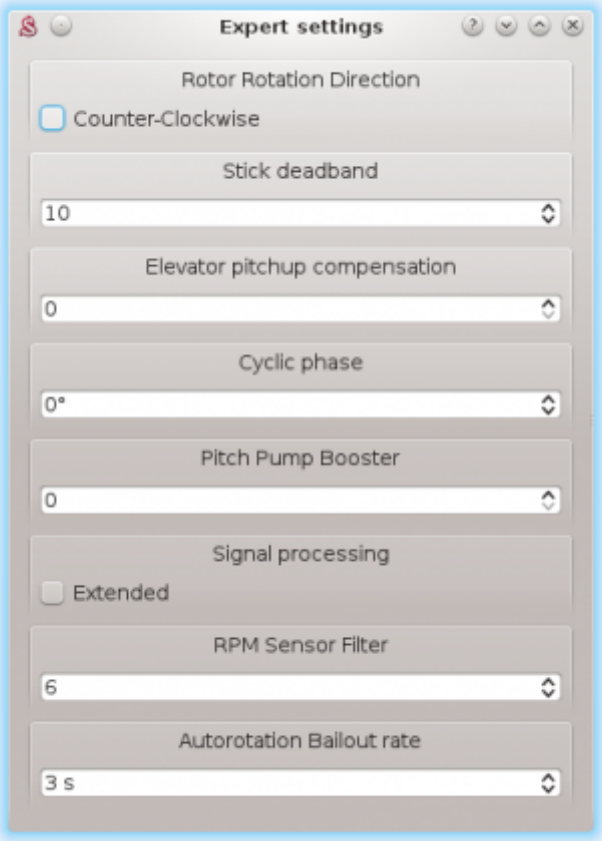

Rotor Rotation Direction
Parameter to determine rotation direction of the main rotor. In the most cases it is in the clock wise direction - parameter is unticked.

Stick deadband
Determines the area, around center stick, where the system does not recognize any stick movement. If channel readings are inprecise the value should be increased. This can be verified in the Diagnostics tab. This parameter does not replace the Exponential function.

Elevator pitchup compensation
If, during fast forward flight, the model reacts to inputs too rapidly or if the model pitches up, increase this value until this no longer occurs. If the helicopter pitches up abruptly, this could be caused by a cyclic range that is too low and/or too much collective pitch. In this case, you will have to increase the Aileron/Elevator range as high as the model can handle without any binding. If this doesn't fix the problem, you can add more pitch-up compensation.

Cyclic phase
The value indicates the angle by which the swashplate is virtually rotated. For example a value of 90 will rotate the elevator to aileron. This feature is recommended for models with multi-blade rotor heads. For most other models, we recommend a zero value.

Pitch Pump Booster
To achieve flybar-like collective pitch behavior, you can increase the value until desired feeling is achieved. Remember that higher values are too demanding for power supply and servos on the model.

Signal processing

This parameter is used for operation on models with extreme vibrations that can't be eliminated in any way. This should be enabled only in cases when is absolutely necessary, because flight performance could be affected. It should increase precision of flight and also the precision of rescue and stabilization modes.

RPM Sensor Filter

In case that your RPM sensor has noisy output then RPM readout can be very unstable. This can lead to various problems with Governor. There may be a problem with spool up, flight mode switching or head speed jittering. To make RPM readout very precise, you may need to increase the value. On the other hand, too high value can lead to a delay, that is unwanted for optimal Governor performance. So the value should be as low as possible while RPM readout is still precise. Variation of 1-20 RPM against the Requested RPM is optimal.

Autorotation Bailout rate

When performing autorotation the Bailout feature is available. The bailout is used to recover the headspeed faster than normally in order to achieve flying RPM. In this way pilot can regain full control of the model and continue in the flight. When using Spirit governor you can use this parameter to precisely set spoolup rate during the bailout. When Spirit governor is disabled, this settings has no affect.

Rudder - Control Type

With µSpirit units it is possible to enable support for the tail rotor driven by dedicated motor. In this case two ESC is used, where Rudder ESC is connected to the CH4 port. Important thing is to set *Limits/Rudder End-Points* appropriately since these are defining available Throttle range for the ESC from 0 to 100%. Normally this parameter is available in the Setup Wizard.

5.8.2 TELEMETRY SETTINGS

ESC Telemetry is feature that enables transmission of the telemetry variables from the ESC to your radio. Covered in the ESC Telemetry page.

5.9 BACKUP TAB

Here, you can save the settings to your Spirit unit before powering off, you can also save the settings to your computer here, Should you need to reload them at a later date.

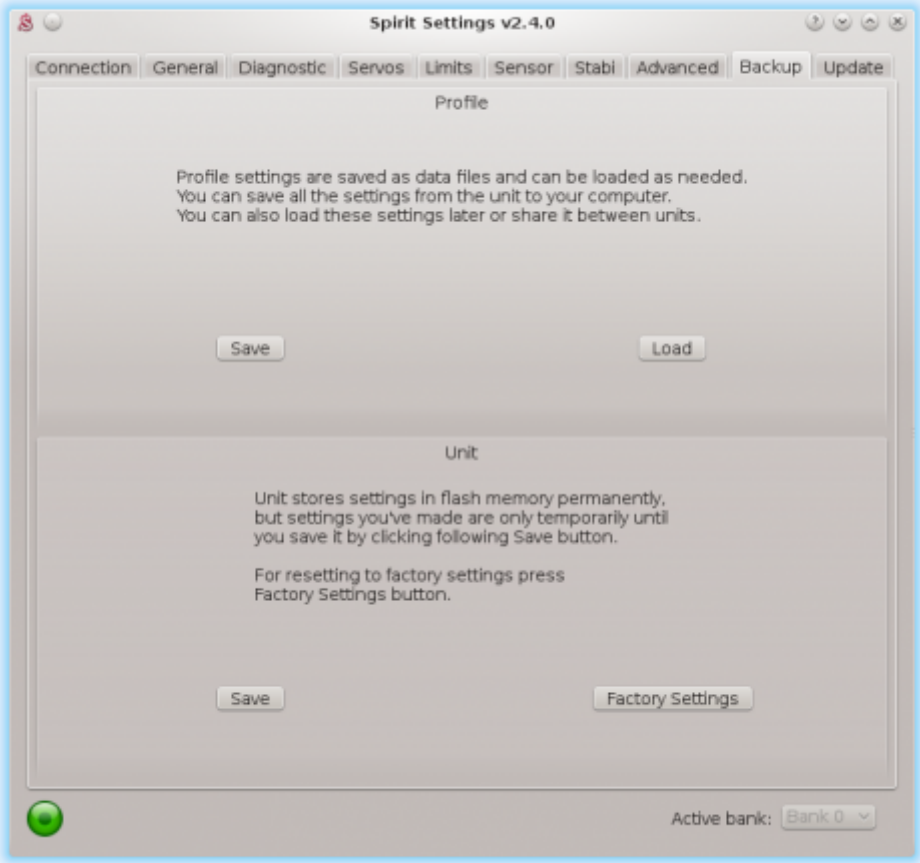

Profile

This section allows you to *Save* and *Load* complete settings of the unit to a specified file. If you have more than one of the same model, it is not necessary to carry out a complete setup again, just load the stored settings easily with the *Load* button.

Unit

Any changes to the configuration can be saved at any time to the internal flash memory of the unit. To put all settings to a factory defaults, click *Factory Settings*.

> Remember to save the settings each time you want to store the settings permanently. You must press the Save button. Otherwise, the changes will be lost after the Spirit FBL unit is turned off.

Bank Switching

In case that the Bank Switching is enabled, you can save the settings from single bank or even all banks. To see the differences between Banks you can use Bank Comparison feature.

5.10 UPDATE TAB

If you want to update the firmware, you can do so in this tab.

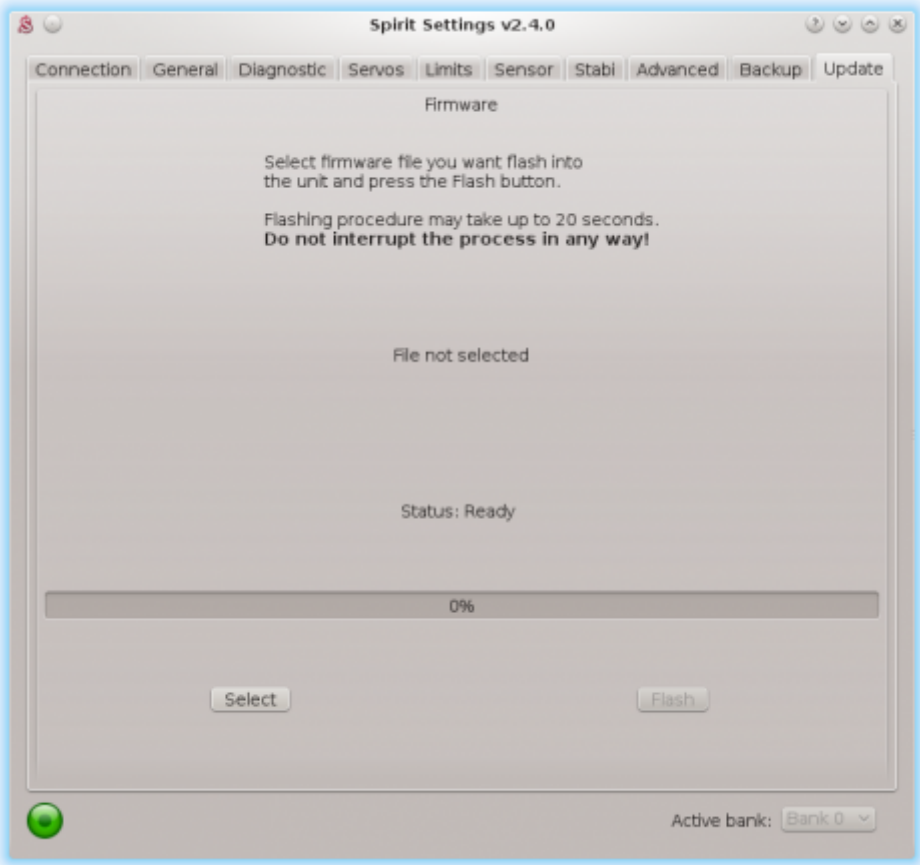

Firmware

First select the data file containing the firmware (*.4df) – *Select button*.Once the file is selected, press the *Flash button*. The upgrade progress will be displayed here. After completion, a confirmation dialog box should indicate a successful update. Then, unplug the unit from its power source. Upon the next start it will load with the newly flashed firmware.

Configuration of the unit is not changed, so you do not need to save/load it.

You can get firmware from: spirit-system.com. (http://spirit-system.com/)

6 BANK SWITCHING

This functionality allows you to switch between saved settings during a flight. Switching is done through the transmitter, so that channel's value is changed. This mean that a Bank can store one unique settings. The unit is able to store 3 different banks.

With a transmitter you are able to use a three position switch to switch freely between banks.

Bank switching is disabled by default, so you can decide whether it is useful in your application. You have to activate it by the assignment of *Bank* function in the *General/Channels* window. Generally, it is assigned to channel 7.

Bank 0 – active in range of lower third (impulse under 1400µs).
Bank 1 – active in range of mid third (impulse between 1400µs to 1640µs).
Bank 2 – active in range of upper third (impulse above 1640µs).

Initial settings for *Bank 1* and *Bank 2* are equal to *Bank 0*. *Bank 0* allow you to configure all parameters, while *Bank 1, 2* does not allow to set main parameters. For safety, *Bank 1 and 2* does not allow you to set any main parameters.

The Bank switching is great for switching between flight styles, sensor gains for low or high RPMs, for slow acro or 3D. Alternatively it can be used just for tuning your settings.

If the software (or a transmitter integration) is connected with the unit then bank switching by assigned switch of the transmitter is temporarily disabled. Then, Bank switching is performed using the software in bottom part of the window. When a bank is switched using the software it is necessary to save your settings to the unit before you switch Banks, or your settings will be returned to the previous (unchanged) state.

Always close the software or any connected app before flying. Otherwise it will be not possible to change Banks by assigned switch of your transmitter.

To verify that the Bank switching is working properly, please start the software and look at the Diagnostic tab. There you can see Bank indicator with the channel bar. Try to change position of assigned switch. If everything is correct, you will see that the Bank number will change there.

7 GOVERNOR

From firmware version 1.2 governor feature is available! You can use this feature instead of internal governor from your ESC or other governor. It is designed to work with electric, nitro and gasser helicopters. This can make flight performance even better because of constant head speed.

To achieve proper function it is very important to configure your ESC and then the unit. First from all make sure that internal governor is disabled in the ESC.

It is necessary to disassemble rotor blades from your model prior to the governor setup. Do not make any adjustments with motor turned on.

Governor feature can be used with the following receiver types:
Spektrum DSM2/DSMX, Futaba S-BUS, Jeti EX Bus, SRXL/SUMD.

It is necessary to use throttle output from the unit when using governor. Throttle output is at the AUX port. You must connect the ESC or throttle servo there.

7.1 Sensor Wiring

Signal from a RPM sensor should be connected to the PIT pin (middle pin of the ELE/PIT/AIL port - Spirit and Spirit Pro).

- ESC with RPM output

  For electric helicopters the best and the easiest solution. You can use RPM output cable that is present on the ESC.

- ESC without RPM output

  In case that your ESC has no RPM output you will need a separate RPM sensor that can be connected to phases of the motor. Important is to power the sensor properly. Voltage can't exceed allowed level for the sensor. Recommended voltage range can be obtained from the sensor manufacturer. In case that the sensor require 3.3V you can connect it to the satellite connector in the unit (Details in the following photo). You can also use the Spektrum adapter.
  In case that the sensor is powered improperly it can be damaged along with the unit.

- Magnetic sensor

  For Combustion helicopters is necessary to use a sensor working on principle change magnetic field. In case that your ESC has no RPM output you will need a separate RPM sensor that can be connected to phases of the motor. Important is to power the sensor properly. Voltage can't exceed allowed level for the sensor. Recommended voltage range can be obtained from the sensor manufacturer. In case that the sensor require 3.3V you can connect it to the satellite connector in the unit (Details in the following photo). You can also use the Spektrum adapter.
  In case that the sensor is powered improperly it can be damaged along with the unit.

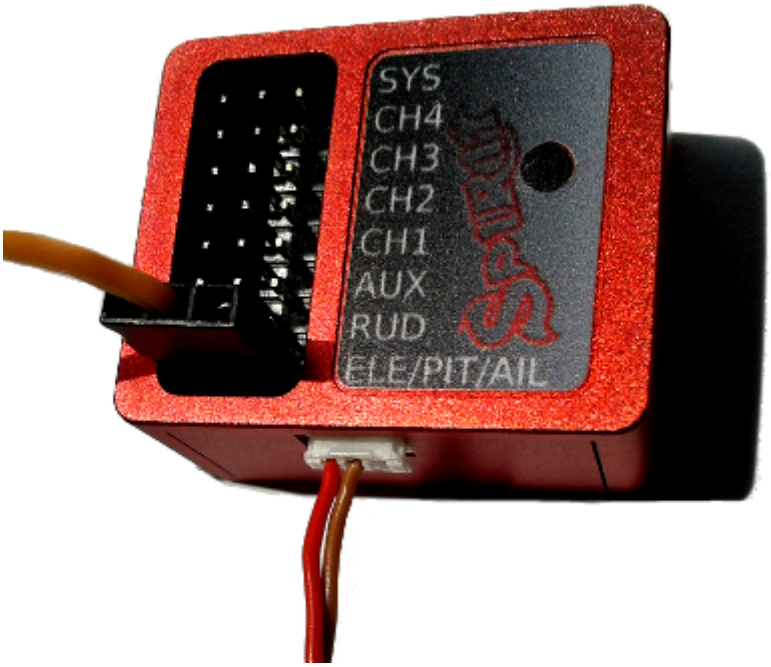

RPM Sensor connection with optional power from the satellite connector.
Red (+3.3V), Brown (GND).

7.2 Prerequisites

Electric

1. Set throttle range in your transmitter so that 0% and 100% throttle position matches with value of the throttle bar in the diagnostics tab. This can be done by Subtrim function in your transmitter and/or Travel Adjustment function.
2. Re-calibrate throttle range according to instructions of your ESC. In the most cases it can be configured by powering the model with throttle stick with 100% throttle and then by moving the stick down to 0%.
3. If possible, configure fast spoolup mode in the ESC so the governor will be unaffected.

Nitro / Gasser

Set the throttle range in your transmitter so that 0% and 100% throttle position matches with value of the throttle bar in the diagnostic tab. This can be done by Subtrim function in your transmitter and/or Travel Adjust function.

7.3 Activation

To activate Governor feature in the unit, you will need to assign Throttle function in the General tab/Channels. Then you will be able to enter Governor Settings in the General tab.

7.4 Settings

First from all basic settings are necessary so the governor can control the head speed correctly.

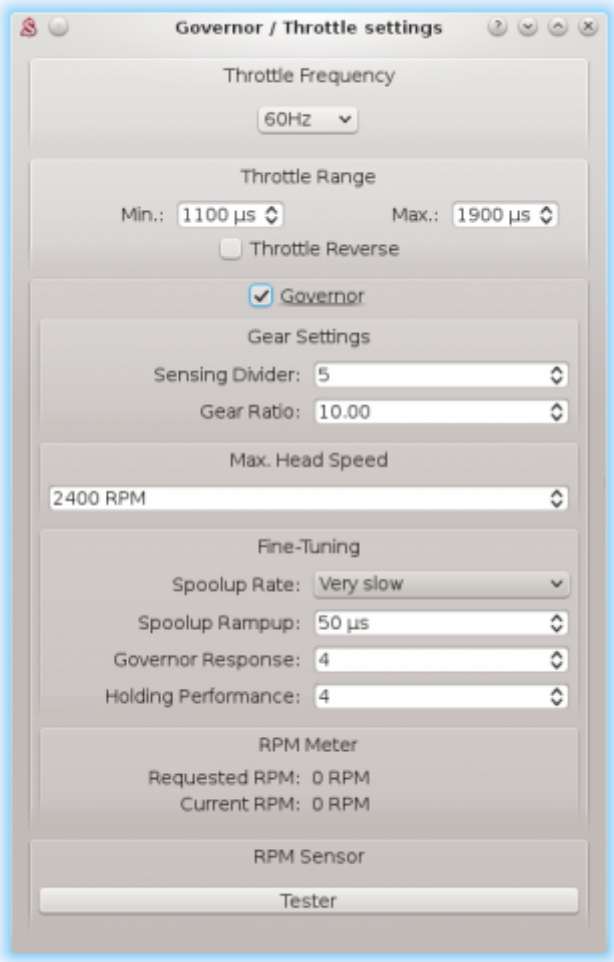

Throttle frequency

To achieve the fastest governor reaction it is necessary to set the highest possible frequency. For ESC it could be only 60Hz, but mostly all can work even with 200Hz. If you are unsure, please contact manufacturer of the ESC. For combustion helicopters it is max. operating frequency of the throttle servo.

Throttle Range

This parameter can affect output from the unit so you can fine-tune ranges precisely. For electric helicopters this parameter is optional. But in case that your ESC does not allow to calibrate throttle range correctly, you can do so here. For Nitro and Gasser helicopters you have to configure it always so the Throttle servo range matches range for the motor.

Throttle Range - Min.

Value of the lowest throttle signal. Default value: 1100 µs. For electric helicopters this value should be specified by manufacturer of the ESC. It is often specified in value of miliseconds (ms). *Parameter is optional* - you do not have to change it if your ESC support the throttle calibration (e.g. by sticks).

You should set the lowest position when the motor is not spinning up anymore – is halted. While configuring this, the motor can start so you have to be very carefull.

Throttle Range – Max.

Value of the highest throttle signal. Default value: 1900 µs. For electric helicopters this value should be specified by manufacturer of the ESC. It is often specified in value of miliseconds (ms). *Parameter is optional* - you do not have to change it if your ESC support the throttle calibration (e.g. by sticks).

The value should be configured to match with 100% throttle output programmed in your ESC or full throttle of the motor. If this parameter is not high enough you will be unable to tune Governor because there will be not enough room to compensate high loads. If configured too high then you can observe that after high load head speed will not drop immediately but can be there even for few seconds.

Throttle Reverse

Especially for Nitro and Gasser motors you can set correct compensation direction for the servo here.

Gear Settings - Sensing Divider

Electric motor: Motor poles / 2. For a 10 pole motor set divider to number 5. Mostly configured to 3 – 5.
Nitro/Gasser motor: Number of all active magnets. Mostly it is 1 – 2.

Gear Settings - Gear Ratio

Gear Ratio of the helicopter between the main wheel and pinion of the motor. For example: 120T main gear / 12T pinion = 10.

Max. Head Speed

Configure max. head speed that should be achieved with 100% throttle curve. For example: If you know that you won't exceed 2500 RPM then you can set the value to 2500. With 80% throttle curve your head speed will be 2000 RPM (2500 * 0.80 = 2000).

Fine-Tuning – Spoolup rate

Configure speed of the motor spoolup. For initial tests we recommend Slow spoolup rate.

Fine-Tuning – Spoolup Rampup

Value that will be added at the beginning of motor spoolup – when Hold is turned off. If the spoolup is not smooth, i.e. motor will start with a kick, the value is too high. If the spoolup has a delay, the value is too low. Default value of 50 µs should work fine in the most cases.

Fine-Tuning - Governor Response

This parameter is the most important one to achieve fast and proper response of the governor. It determine how fast the governor should react to a short-term load. Thus optimal settings are required. If configure too low or too high, rudder will not hold properly and can oscillate. Governor can greatly affect rudder performance so you can achieve better holding behavior. Too high value will result in overspeeding during e.g. pitch pump.

Fine-Tuning - Holding Performance

Determine how well the head speed is maintained during a long-term load. If value is too low then during e.g. tic-toc maneuver head speed can drop gradually. In case it is too high then after the tic-toc head speed can be higher than necessary and can even return to requested RPM with noticeable delay. It is better to start governor tuning process with low value.

7.5 Transmitter

Flat Throttle Curve above 50% is necessary in order to use Governor feature. Under 50% Governor is immediately disarmed and instead motor will be driven directly by throttle curve. As soon as it will exceed 50% spoolup procedure is engaged until Requested RPM is reached. Only when Flight log will show **Governor was Engaged** then Governor is maintaining Head-Speed. If this message is not present it mean that Governor is still in the spoolup procedure.

In order to achieve different Head Speeds on demand you can set different flat curves (for example for each flight mode).

Governor can be deactivated in flight by switching to a Bank where Governor is disabled in the Spirit Settings. It can be also re-activated by switching back to a Bank with enabled Governor.

With a combustion motors we recommend to go from Idling (Throttle Curve around 10%) directly to 50% flat curve and above. This will trigger smooth spoolup.

7.6 Fine-Tuning Procedure

Firstly you have to finish basic setup including *Max. Head Speed*. Throttle curve in the transmitter must be FLAT. We recommend to set the throttle curve for example to flat 70%, 80% or 90%.

After disarming Throttle Hold you should immediately see *Requested RPM* in the software – this is desired head speed that should be maintained. *Current RPM* is head speed that is currently on the rotor head. If *Current RPM* is not calculated properly, then there is a problem with Gear Settings. In case that you can see zero or random *Current RPM* value then there is a problem with RPM Sensor and must be fixed.

Performance tuning procedure

We recommend to set the following values for the beginning:

- Governor Response: 5
- Holding Performance: 1

1. You should start with increasing the Governor Response. You can do so until RPM is constant enough while doing aggressive collective pitch changes during hovering. When you will notice an overspeeding (RPM is higher than initially was) then the value is too high. In case that the value is too low or too high then the rudder performance can be affected negatively as well.
2. When the Governor Response is well tuned, you can continue with increasing the Holding Performance parameter. In case that the value is too low, you will notice poor holding performance during demanding maneuvers with longer duration such as loop or tic-toc. If the value is too high, you can observe that the head speed is unstable even during stationary hovering.

Governor Response: 6 and Holding Performance: 5 may work fine for wide range of the helicopters.

- Throttle calibration of the ESC is possible only if the Governor is disabled in the unit.
- For throttle curve under approx. 50% governor is inactive – throttle is controlled directly.
- You should see "Governor was Engaged" event in the log after spoolup with enabled governor.
- Governor Bailout function can be activated whenever the throttle signal is higher than 1250 µs which is approx. 12% throttle curve. If the signal is lower then smooth spoolup sequence is activated.
- In case that the *Current RPM* value is 4000 RPM measurement is out of range. It may be needed to change count of the active magnets.
- If governor does not react correctly during Throttle Curve changes or even during spoolup, it is most probably result of an excess noise in the RPM sensor or connection. You may consider to use a proper shielding. Increasing value of the RPM Sensor filter in the Expert settings can solve the problem.

7.7 Sensor List and Troubleshooting

List of supported RPM sensors and their wiring is available on the Governor page.

You can also find there solutions for a various problems related with the Governor.

8 SOFTWARE KEYBOARD CONTROL

For fast and easy configuration we have implemented keyboard controls in the software.

Shortcut	Function
F1 to F10	Switch between tabs.
ESC	Exit current window.
CTRL + S	Save settings to the unit.
CTRL + P	Save profile to your computer.
CTRL + L	Load profile from your computer to the unit.
CTRL + W	Connection settings for the Wifi-Link module.
Numpad 0, 1, 2	Switch between banks.
Tab	Switch between parameters.
Space	Select parameter / option
Arrows	Increase / Decrease value.
Page Up / Page Down	Increase / Decrease value by tens.
Home	Set the lowest value.
End	Set the highest value.

Stabi mode

In order to enable Rescue or stabilisation modes you have to set *Stabi/Function* to a desired option. When *Disabled*, no special function will be used.

> It is possible to set a different functions between Banks.

From version 2.3.0 it is possible to activate the *Stabi/Function* in the two ways:

- **Negative Gyro Gain**
- **Separate channel** *(NEW)*

Contents

1 Negative Gyro Gain

For normal flying a positive Gyro Gain is used. To activate function which is selected in the parameter *Stabi/Function* it is necessary to set a negative gyro gain.

> Gyro Gain is still used to set the rudder gyro gain. At the same time, positive or negative value will determine if selected function is inactive or active. So it is important to set the gyro gain properly for both normal flight and selected function. Usually same, but opposite values are fine (for example +60%/-60%)

The function is active as long as the Gyro Gain is negative. Then the normal flight is engaged again. Because unit allow to set the Gyro Gain by your transmitter or directly in the software, you have two options how to do that.

1.1 In the transmitter (common)

This is the common way how pilots are configuring the Gyro Gain. It can be easily programmed for a two-state switch. For the Rescue a momentary switch is the best. Usually you can find the configuration in the GYRO menu in your transmitter. For the beginning you can set:

- Position 0: 50% (normal flight)
- Position 1: -50% (selected function)

This will set a moderate Gyro Gain and allow to select which mode will be used anytime during the flight.

Do not forget to set the gains accordingly for your model. Also make sure that the *Gyro Gain* function is assigned in the software.

1.2 In the software

When you do not want to or can't set your Gyro Gain in the transmitter, you can do so in the software. There is only requirement to unassign the Gyro Gain function in the *General/Channels* window. This mean that transmitter have no control over the Gyro Gain. Instead the value is configured by the *Sensor/Rudder Gain* parameter.

There is disadvantage that in order to activate selected function, you have to set a negative *Rudder Gain*. This can't be changed during the flight normally. On the other hand, you can use a Bank Switching (http://manual.spirit-system.com/index.php?title=Configuration#BANK_SWITCHING) feature and program a different *Function* and *Rudder Gain* for each bank.

1.

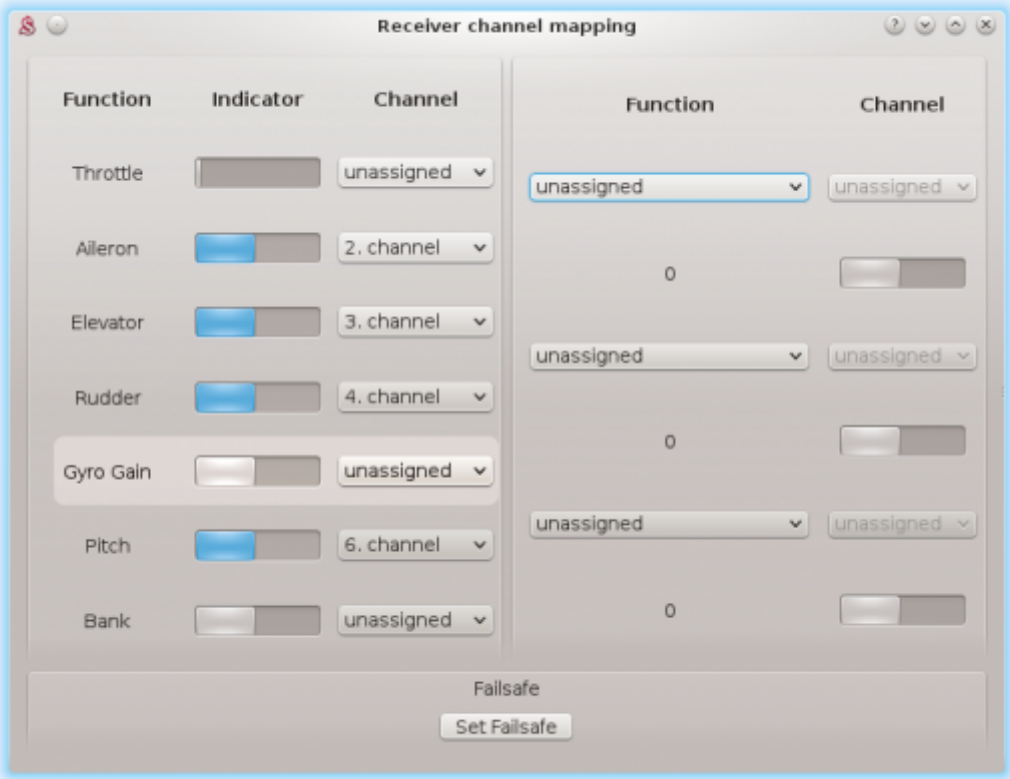
Receiver channel mapping
Function
Indicator
Channel
Throttle
unassigned
Aileron
2. channel
Elevator
3. channel
Rudder
4. channel
Gyro Gain
unassigned
Pitch
6. channel
Bank
unassigned
Function
Channel
unassigned
unassigned
0
unassigned
unassigned
0
unassigned
unassigned
0
Failsafe
Set Failsafe

2.

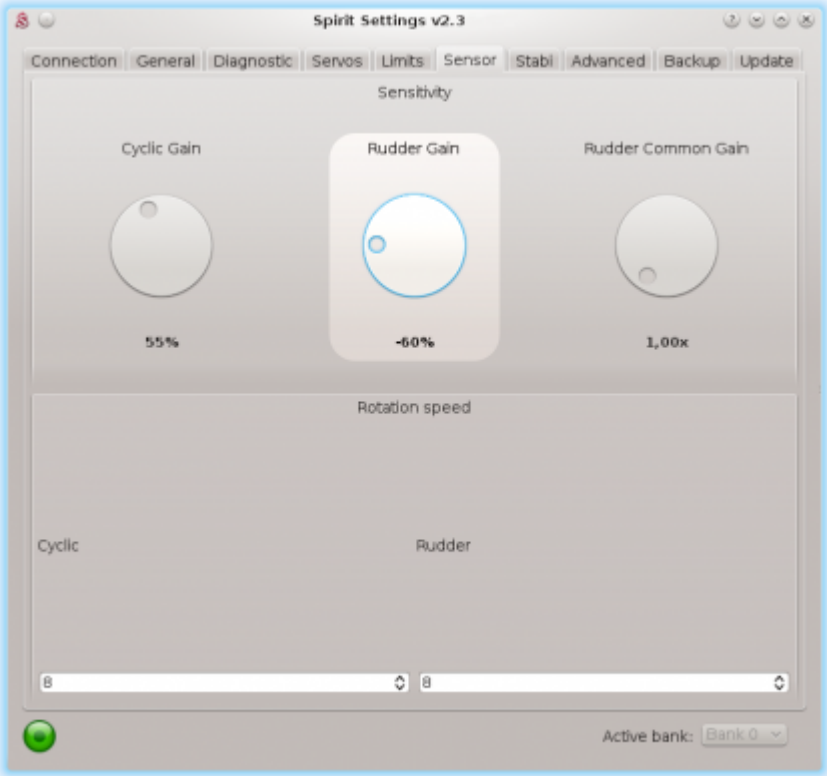
Spirit Settings v2.3
Connection
General
Diagnostic
Servos
Limits
Sensor
Stabi
Advanced
Backup
Update
Sensitivity
Cyclic Gain
Rudder Gain
Rudder Common Gain
55%
-60%
1,00x
Rotation speed
Cyclic
Rudder
8
8
Active bank:
Bank 0

1.3 Function vs Gyro

Following table is describing how *Gyro Gain* can activate selected *Function*.

Function	Gyro Gain	Gyro Mode	Flight Mode
Disabled	0 - 100%	Head-Lock	-
Rescue (Normal)	0 - 100%	Head-Lock	-
Rescue (Acro)	0 - 100%	Head-Lock	-
Stabilisation (Normal)	0 - 100%	Head-Lock	-
Stabilisation (Acro)	0 - 100%	Head-Lock	-
Stabilisation (Scale)	0 - 100%	Head-Lock	-
Coaxial	0 - 100%	Head-Lock	-
Disabled	-100% - 0%	Normal (Rate)	-
Rescue (Normal)	-100% - 0%	Head-Lock	Rescue
Rescue (Acro)	-100% - 0%	Head-Lock	Rescue
Stabilisation (Normal)	-100% - 0%	Head-Lock	Stabilisation
Stabilisation (Acro)	-100% - 0%	Head-Lock	Stabilisation
Stabilisation (Scale)	-100% - 0%	Normal (Rate)	Stabilisation
Coaxial	-100% - 0%	Head-Lock	Stabilisation

2 Separate channel

Function in the *Stabi/Function* parameter will be activated by a dedicated channel selected in the *General/Channels*.

Channel configuration

1. Open the *General/Channels*.
2. In the right part of the Channels window, select *F: Stabi Function*.
3. Then select a channel that you can use for the activation.
4. Assign a switch in your transmitter that will control the channel (assigned channel should react now).

Function indicator

- *0* - function is inactive.
- *1* - function is active.

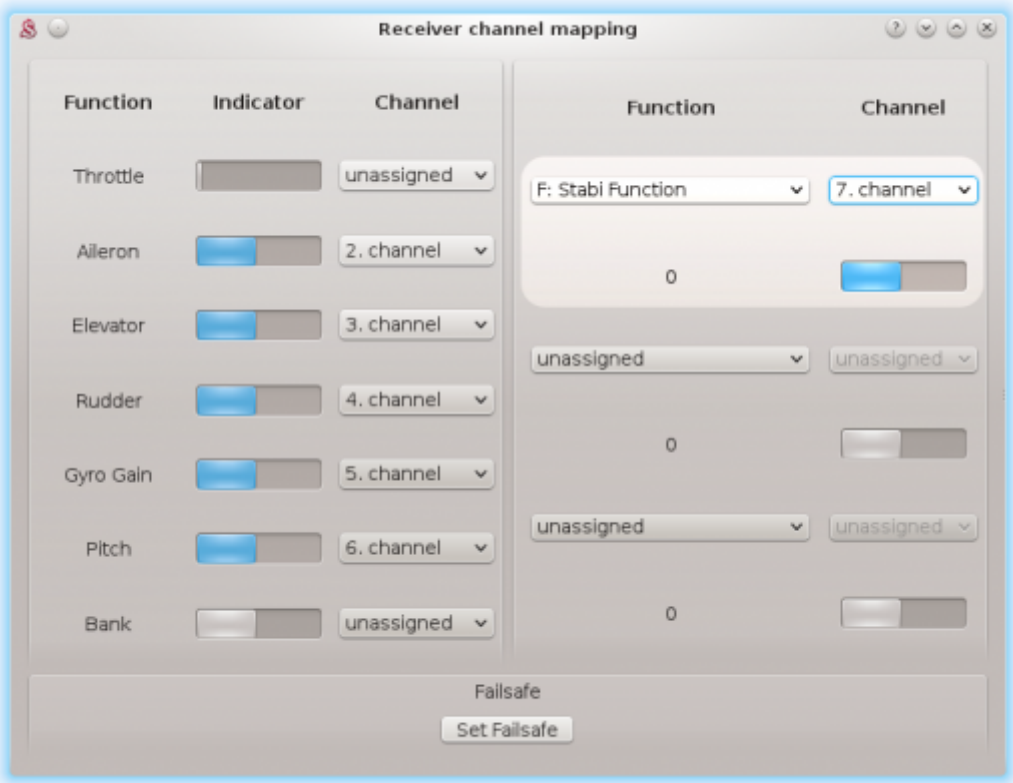

Gyro Gain can still change gyro mode (Head-Lock or Normal). Positive Gyro Gain value will activate Head-Lock mode always. Active Function and Gyro mode is always visible in the Diagnostic tab.

2.1 Function vs Channel

Following table is describing how selected *Channel* can activate the *Function*.

- Flight Mode **"-"** mean that the function is inactive and a normal flight regime is on.

Function	Channel	Gyro Mode	Flight Mode
Disabled	-100% - 0%	Head-Lock / Normal	-
Rescue (Normal)	-100% - 0%	Head-Lock	-
Rescue (Acro)	-100% - 0%	Head-Lock	-
Stabilisation (Normal)	-100% - 0%	Head-Lock	-
Stabilisation (Acro)	-100% - 0%	Head-Lock	-
Stabilisation (Scale)	-100% - 0%	Head-Lock / Normal	-
Coaxial	-100% - 0%	Head-Lock	-
Disabled	0 - 100%	Head-Lock / Normal	-
Rescue (Normal)	0 - 100%	Head-Lock	Rescue
Rescue (Acro)	0 - 100%	Head-Lock	Rescue
Stabilisation (Normal)	0 - 100%	Head-Lock	Stabilisation
Stabilisation (Acro)	0 - 100%	Head-Lock	Stabilisation
Stabilisation (Scale)	0 - 100%	Head-Lock / Normal	Stabilisation
Coaxial	0 - 100%	Head-Lock	Stabilisation

First flight

If you are sure that the unit is correctly configured, you are ready for your first flight.

We recommend to set Gyro Gain to 50% value for the first flight. This will set the Head-Lock gyro mode at a moderate gain.

1 PRE-FLIGHT CONTROL

1. Turn on the transmitter and connect the battery to the model.
2. Wait for the initialization, the swashplate jumps.
3. Tilt the model, ensure the swashplate is compensating in the correct direction on all axes.
4. Move the tail boom in any direction, the tail slider/rudder blades should compensate in the opposite direction.
5. Check that input from the transmitter sticks moves the swashplate and tail in the correct directions.
6. Place the model on a flat surface, use the transmitter sticks to level the swashplate if it isn't already, the tail slider should be approximately in the center of its travel range.

⚠️ If you encounter a problem or something appears wrong at this point, do not try to take off!

2 TAKEOFF

1. Spool up the main rotor to the desired speed - we recommend to start with a slightly lower RPM.
2. Slowly increase the collective pitch from zero.
3. Try to steer the rudder and check whether it has sufficient gain and stop performance is good.
4. If control is not very precise, slowly add cyclic and rudder gain as needed.

3 TUNING

Once you have finished the first flight and you want to achieve the optimal settings, please check the Tuning Guide.

Problems and Solutions

Problem description	Solution
Swashplate or tail drifts after initialization	Check trims and subtrims. Sticks in neutral position must be 0%, see the *Diagnostics tab*. Increase Stick deadband in *Advanced tab*.
Rudder or cyclic is not precise	Increase cyclic gain and/or increase the gyro gain in the transmitter. Add exponential in the transmitter.
Aggressive cyclic pitch movement or fast forward flight leads to rapid, large tail oscillations	Decrease pirouette consistency in the *Advanced tab* gradually by 10 until this disappears. Check the tail mechanics for binding.
Model oscillates in elevator or aileron axes	Decrease cyclic gain in *Sensor tab*.
Tail oscillates rapidly	Decrease gyro gain in the transmitter.
Flips and rolls are too slow or too fast	Increase/decrease rotation speed for Cyclic in the *Sensor tab*.
Pirouette is too slow/fast	Increase/decrease rotation speed for Rudder in the *Sensor tab*.
Servos jitter randomly without external influences	Check the cable connection between the receiver and the unit.
During stationary pirouettes model drifts	Check the Subtrim configuration in the *Servos tab*. It seems to be inprecise.
Aggressive elevator stick movement leads to bouncing	Increase elevator filter in *Advanced tab* and/or decrease cyclic feed forward in *Advanced tab*.
Cyclic feel is delayed or disconnected	Increase cyclic feed forward in *Advanced tab*.
Elevator servo is not moving when initialization is finished	Flight log from the previous flight was saved. View the log in the *Diagnostic* tab and fix reported problem.
Swashplate is jumping in a cycle when initialization is finished	The unit was started with the Rescue mode engaged. Turn off the rescue from your transmitter.
Rudder stop is not equal for both sides	Check rudder servo center position, rudder mechanics. You can also try to lower rudder limit for the side where bounce-back occur.
Positive and negative collective pitch is unequal	Enable Servos/Subtrim (tuning) and verify that servo arms are perpendicular, swashplate perfectly leveled and there is 0° between main blades. If yes, use the Servo Travel Correction.
Castle ESC is not arming	Set *General - Throttle/Governor - Throttle Range Min.* to 1060µs and *Max.* to 1940µs.
RPM readout is not correct with the ESC Telemetry	Temporarily enable *General - Throttle/Governor - Governor* and set *Sensing Divider* and *Gear Ratio*. Then turn the Governor off if governor from ESC is used.

Thanks

To all who in any way participated and are participating in the development of Spirit, many thanks!

Special thanks to:

Adam Kruchina
Daniel Beneš
Daniel Matloch
David Henderson
Dušan Habada
Elke Lalanza
Frank Chessa
Gabriel Wong
James Pizzey
Jens Lalanza
Martin Přinda
Martin Štvrtňa
Milan Křivda
Milan Pěchovič
Petr Čada
Petr Koťátko
Rafael Villarta Castillo
René Štefánik

Declaration about conformity

It is hereby confirmed that Spirit unit is being produced according to EMC directive 2004/108/EC, electromagnetic compatibility.